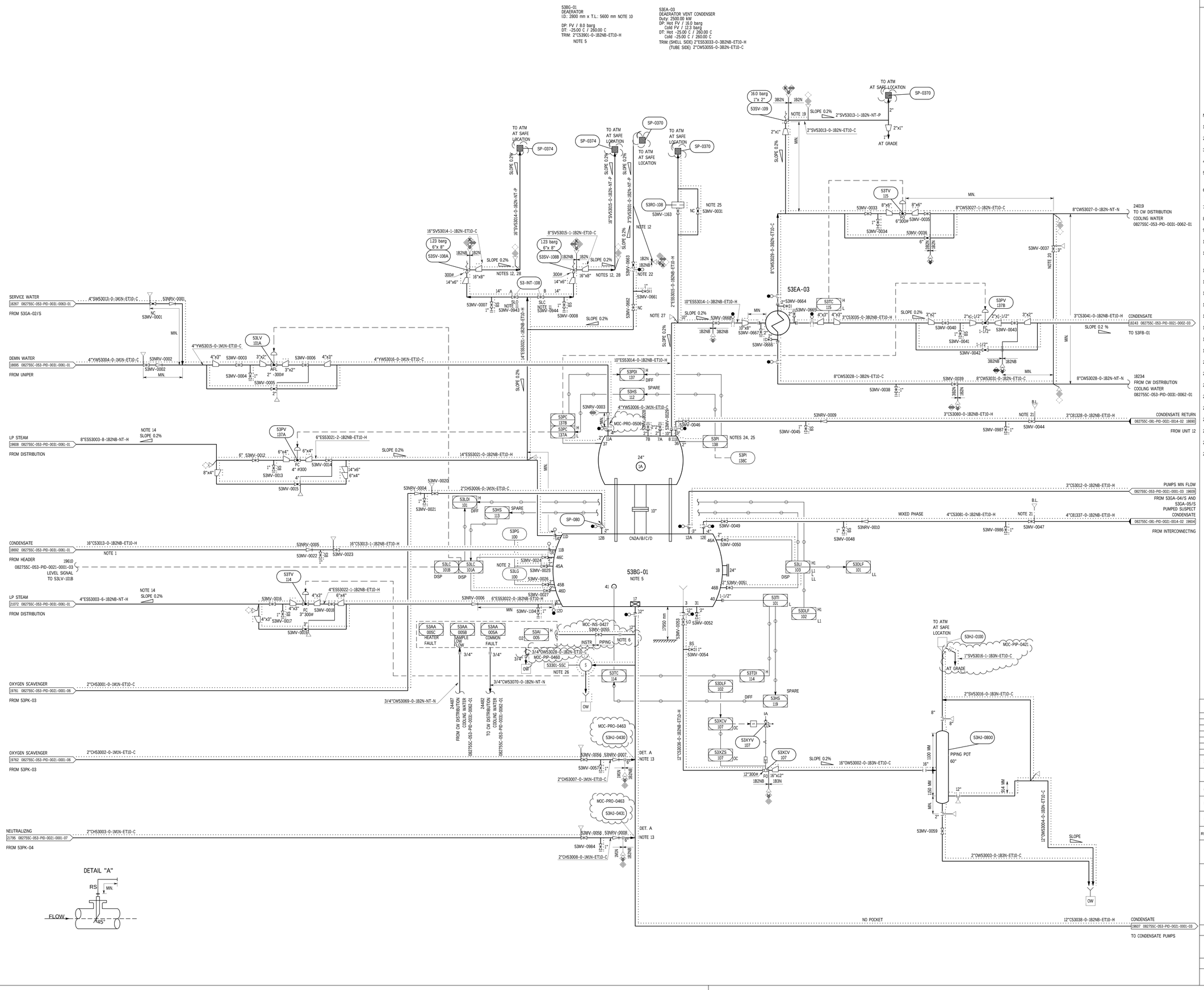

GENERAL NOTES

- FOR GENERAL NOTES AND SYMBOLS REFER TO P&ID'S 082755C-000-PID-0021-0001/0002/0003.
- ALL INSTRUMENT NOZZLES SHOWN ON EQUIPMENT ARE RATING 300# MINIMUM.
- ALL LOCAL ELECTRONIC INDICATORS HAVE TO BE INSTALLED IN A LOCATION ACCESSIBLE BY OPERATORS (I.E. GROUND LEVEL OR NEAR PLATFORM).
- FLANGES SHALL BE AT LEAST 300# FOR ALL PIPING DRAINS WITH SIZE LOWER THAN 2".
- THE RATING OF THE SAFETY VALVE INLET/OUTLET FLANGES SHALL BE THE SAME OF THE RESPECTIVE INLET/OUTLET LINES RATING UNLESS OTHERWISE SPECIFIED.
- ALL FLANGES/JOINTS THAT ARE ENVISAGED ON THE PIPING IN HYDROCARBON/CHEMICAL SERVICE, WILL BE PROVIDED OVER THE PAVED AREA WITHIN THE PROJECT BATTERY LIMIT.

NOTES:

1. MIXED PHASE.
2. LEVEL MEASUREMENTS NOZZLE AT SAME LEVEL.
3. DELETED.
4. DELETED.
5. VESSEL IS ELECTRICALLY TRACED FROM THE BOTTOM UP TO LOW LOW LIQUID LEVEL (LLL) TO AVOID FREEZING DURING SHUT-DOWN.
6. SAMPLE NOZZLE ARRANGEMENT ACCORDING TO 082755C-000-JSD-1300-0002 STD-139C-0028 & STD-139C-0040. MOC-INS-0427
7. DELETED.
8. DELETED.
9. DELETED.
10. DIMENSIONS REFER TO HOLD-UP TANK. DEGASSING TOWER DIMENSIONS BY VENDOR.
11. BLOCK VALVES ARE KEY INTERLOCKED TO ENSURE THAT AT LEAST ONE SAFETY VALVE IS IN OPERATION.
12. PROVIDE 6 MM WEEP HOLE AT LOW POINT OF RELIEF VALVE DISCHARGE LINE TO ATMOSPHERE.
13. INJECTION QUILL. SEE DETAIL A.
14. LINE TO BE SLOPED TOWARD THE STEAM HEADER.
15. DELETED.
16. DELETED. MOC-PRO-0506
17. DELETED.
18. DELETED.
19. 1M OF PIPING LENGTH MINIMUM TO BE TRACED.
20. PROVIDE 8MM HOLE ON VALVE DISC OF BY-PASS VALE FOR WINTERIZATION PURPOSE.
21. BL ARRANGEMENT USED FOR COMMISSIONING/PRECOMMISSIONING/START-UP PHASE.
22. VALVE TO BE USED DURING START-UP.
23. DELETED.
24. LOCAL PRESSURE INDICATION VISIBLE TO BE PROVIDED.
25. PRESSURE LOCAL INDICATION VISIBLE FROM VENT VALVE.
26. FOR SAMPLE DETAILS REFER TO PID 082755C-053-PID-0021-0075.
27. VENT LINE LOCATED AT PIPE HIGH POINT.
28. OUTLET LINE TO BE TRACED "ET10-C" UP TO WEEP HOLE.

53DLF 101	CONDENSATE PUMPS 53GA-04/S AND MP CONDENSATE PUMPS 53GA-05/S SHUTDOWN
53DLF 102	DEAERATOR 53BG-01 OVERFLOW

Segment Breaks

- End of Group
- Nominal Diameter
- Piping Materials Class
- Max Design Temp. or Press.
- Heat Tracing
- Insulation Requirement
- Coating Requirement
- Supply Responsibility
- Commissioning package
- Design Responsibility
- Norm operating temp or press

CONFIDENTIAL

EQUIPMENT LIST

VESSELS	EXCHANGERS
53BG-01	53EA-03

REV.	DATE	DESCRIPTION	PREP	CKD	APPR
2	23/04/2024	ISSUE FOR CONSTRUCTION 3	F.G.	S.T./F.F.	C.M./M.L.
1	03/10/2023	ISSUE FOR CONSTRUCTION 2	C.A.T.	S.T./E.S.	A.C./M.L.
0	21/04/2023	ISSUE FOR CONSTRUCTION 1	C.A.T.	S.T./E.S.	A.C./M.L.
E	22/11/2022	ISSUE FOR DETAIL DESIGN	C.A.T.	S.T./E.S.	A.C./M.L.
D	11/03/2022	ISSUE FOR HAZOP	C.A.T.	S.T./E.S.	A.C./M.L.

NESTE

TECHNIP ENERGIES

RDCG (Rotterdam Capacity Growth)
NESTE

UTILITIES MNA CONDENSATE COLLECTION SYSTEM PIPING & INSTRUMENT DIAGRAM

TPIT Drawing No						Page	Rev.
082755C	053	PID	00	21	0001	1 of 7	2
Project	Unit	Doc. Type	Disc	Subj	Ser.No		

NESTE Drawing No				
2305		PID		
Site	Unit	Doc. Type	Drawing Code	Seq.No

TECHNIP ENERGIES ITALY S.p.A - 00148 ROMA - Viale Castello della Magliana, 68

This present document or drawing is property of TECHNIP ENERGIES ITALY S.p.A. and shall not, under any circumstances, be copied or partially, directly or indirectly, transmitted, reproduced, quoted, disclosed or used, without its prior written consent, for any purpose and in any way other than for which it is specifically furnished or outside the scope of the agreed upon right of use.

53FA-05
SC FLASH DRUM
I.D.: 3500 mm x T.L.: 4200 mm

DP: FV / 8.0 barg
DT: -25.00 C / 260.00 C
TRIM: C53902-0-1B2NB-ET10-H
NOTE 5

53GA-07 / S
SUSPECT CONDENSATE PUMP
Vdes: 200 m^3/hr
dP: 3.2 bar

53EA-01
VENT STEAM CONDENSER
Duty: 636.00 kW
DP: Tube FV / 16.0 barg
Shell FV / 12.3 barg
DT: Tube -25.00 C / 260.00 C
Shell -25.00 C / 260.00 C

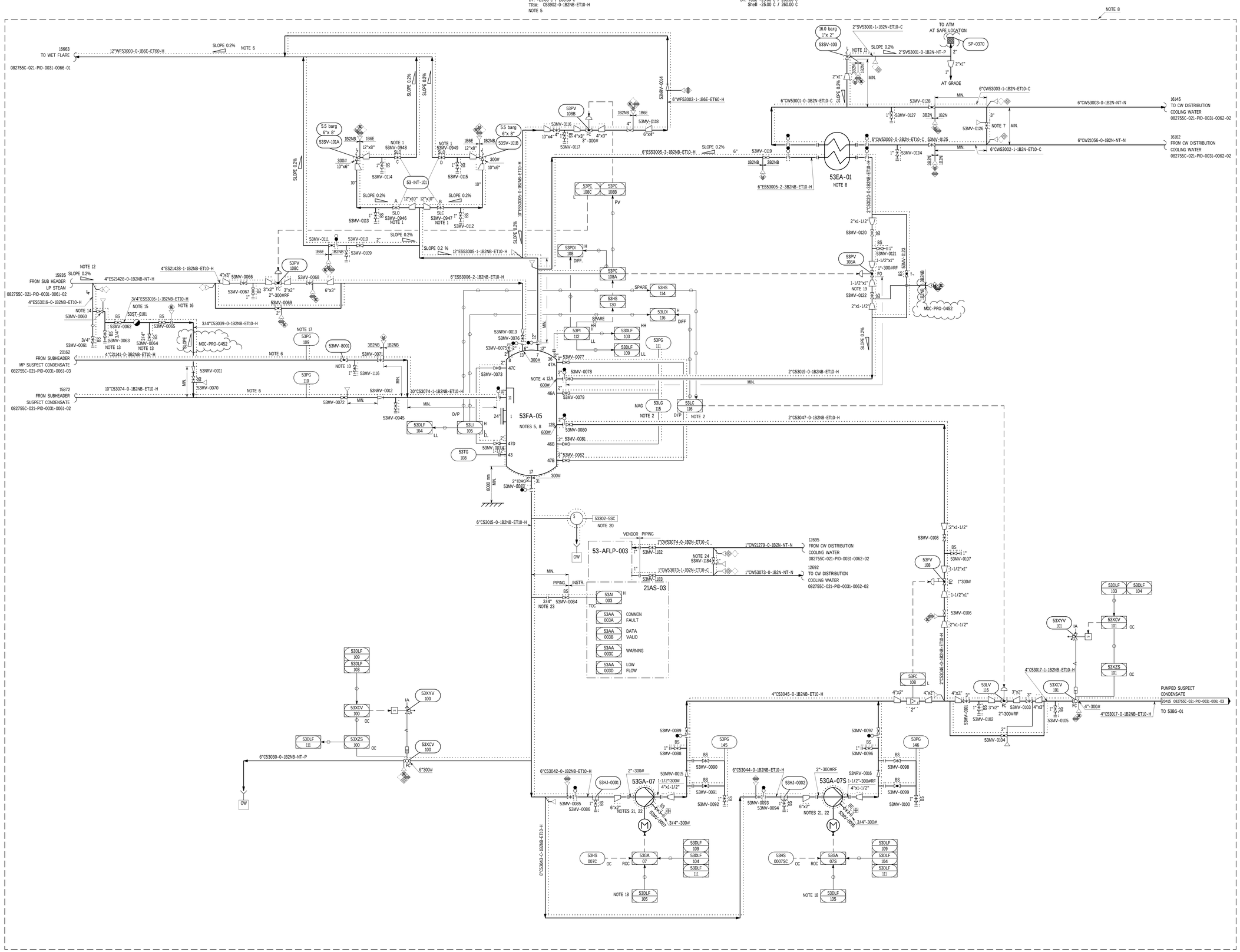

GENERAL NOTES

- FOR GENERAL NOTES AND SYMBOLS REFER TO P&ID'S 082755C-000-PID-0021-0001/0002/0003.
- ALL INSTRUMENT NOZZLES SHOWN ON EQUIPMENT ARE RATING 300# MINIMUM.
- ALL LOCAL ELECTRONIC INDICATORS HAVE TO BE INSTALLED IN A LOCATION ACCESSIBLE BY OPERATORS (I.E. GROUND LEVEL OR NEAR PLATFORM).
- FLANGES SHALL BE AT LEAST 300# FOR ALL PIPING DRAINS WITH SIZE LOWER THAN 2".
- THE RATING OF THE SAFETY VALVE INLET/OUTLET FLANGES SHALL BE THE SAME OF THE RESPECTIVE INLET/OUTLET LINES RATING UNLESS OTHERWISE SPECIFIED.
- ALL FLANGES/JOINTS THAT ARE ENVISAGED ON THE PIPING IN HYDROCARBON/CHEMICAL SERVICE, WILL BE PROVIDED OVER THE PAVED AREA WITHIN THE PROJECT BATTERY LIMIT.

NOTES:

1. BLOCK VALVES ARE KEY INTERLOCKED TO ENSURE THAT AT LEAST ONE SAFETY VALVE IS IN OPERATION.
2. LEVEL MEASUREMENTS NOZZLES AT SAME LEVEL.
3. DELETED.
4. NOZZLE INSTALLED BELOW LOW LOW LIQUID LEVEL.
5. VESSEL IS ELECTRICALLY TRACED FROM THE BOTTOM HEAD UP TO LOW LOW LIQUID LEVEL (LL) TO AVOID FREEZING DURING SHUT-DOWN.
6. MIXED PHASE.
7. PROVIDE 8MM HOLE ON VALVE DISC OF BY-PASS VALE FOR WINTERIZATION PURPOSE.
8. ITEM LOCATED INSIDE UNIT 21.
9. DELETED.
10. STOP CHECK VALVE. VALVE IS USED TO KEEP AN UPSTREAM PRESSURE OF 4 BARG.
11. 1M OF PIPING LENGHT MINIMUM TO BE TRACED.
12. LINE TO BE SLOPED TOWARD THE STEAM TRAP.
13. STEAM AND CONDENSATE LINES TO BE INSULATED TOGETHER.
14. FOR PIPING CONDENSATE POT DETAILS REFER ASSEMBLY SHOWN ON 082755C-000-STD-1380-0010 PART OF "GENERAL DESIGN RULES FOR PIPING" (082755C-000-JSD-1300-0002).
15. STRAINER SUPPLIED WITH TRAP.
16. CHECK VALVE TO BE LOCATED AT HIGHEST POINT AS CLOSE AS POSSIBLE TO CONDENSATE RETURN HEADER.
17. PG READABLE FROM STOP CHECK VALVE.
18. SPARE PUMP IS STARTED AUTOMATICALLY IN CASE OF FAILURE OF THE DUTY ONE (NOT RUNNING).
19. VALVE TO BE PROVIDED AS CLOSE AS POSSIBLE TO NOZZLE 12A, AT SAME ELEVATION.
20. FOR SAMPLE DETAILS REFER TO PID 082755C-053-PID-0021-0075.
21. FOR DETAILED ARRANGEMENT OF API PLAN REFER TO 082755C-053-PID-0021-0075-01.
22. PUMP TO BE ELECTRICALLY TRACED AND INSULATED, ELECTRICAL TRACING NOT INCLUDED IN PUMP MFR SCOPE OF SUPPLY. PUMP CASING REMOVABLE THERMAL BLANKET INCLUDED IN PUMP MANUFACTURER SCOPE OF SUPPLY, SUPPLIED LOOSE. PUMP DRAIN INSULATION IN TEN SCOPE OF SUPPLY, OUT OF VENDOR SCOPE.
23. ANALYZER SAMPLING NOZZLE ARRANGEMENT ACCORDING 082755C-000-JSD-1300-0002. STD-139C-0028 & STD-139C-0040.
24. PROVIDE 5MM HOLE ON VALVE DISC.

53DLF 103	SC FLASH DRUM 53FA-05 CONDENSATE OUTLET CLOSURE
53DLF 104	SUSPECT CONDENSATE PUMPS 53GA-07/S SHUTDOWN FOR LOW LOW LEVEL
53DLF 109	SUSPECT CONDENSATE PUMPS 53GA-07/S SHUTDOWN FOR LOW LOW PRESSURE
53DLF 105	SUSPECT CONDENSATE PUMP 53GA-07/S AUTOSTART
53DLF 111	SUSPECT CONDENSATE PUMPS 53GA-07/S SHUTDOWN FOR 53XCV-100 NOT CLOSED.

Segment Breaks

- End of Group
- Nominal Diameter
- Piping Materials Class
- Max Design Temp. or Press.
- Heat Tracing
- Insulation Requirement
- Coating Requirement
- Supply Responsibility
- Commissioning package
- Design Responsibility
- Norm operating temp or press

CONFIDENTIAL

EQUIPMENT LIST

VESSELS	EXCHANGERS	PUMPS			
53FA-05	53EA-01	53GA-07			
		53GA-07S			

REV.	DATE	DESCRIPTION	PREP	CKD	APPR
2	23/04/2024	ISSUE FOR CONSTRUCTION 3	F.G.	S.T./F.F.	C.M./M.L.
1	03/10/2023	ISSUE FOR CONSTRUCTION 2	C.A.T.	S.T./E.S.	A.C./M.L.
0	21/04/2023	ISSUE FOR CONSTRUCTION 1	C.A.T.	S.T./E.S.	A.C./M.L.
E	22/11/2022	ISSUE FOR DETAIL DESIGN	C.A.T.	S.T./E.S.	A.C./M.L.
D	11/03/2022	ISSUE FOR HAZOP	C.A.T.	S.T./E.S.	A.C./M.L.

NESTE

TECHNIP ENERGIES

RDCG (Rotterdam Capacity Growth)
NESTE

UTILITIES MNA

SUSPECT CONDENSATE COLLECTION SYSTEM PIPING & INSTRUMENT DIAGRAM

TPIT Drawing No						Page	Rev.
082755C	053	PID	00	21	0001	2 of 7	2
Project	Unit	Doc. Type	Disc	Subj	Ser.No		

NESTE Drawing No

Site	Unit	Doc. Type	Drawing Code	Seq.No
2305		PID		

The present document or drawing is property of TECHNIP ENERGIES ITALY S.p.A. and without, under any circumstances, its copyright is partially, directly or indirectly, transferred, reproduced, copied, disclosed or used, without its prior written consent, for any purpose and in any way other than for which it is specifically furnished or outside the scope of the signed upon right of use.

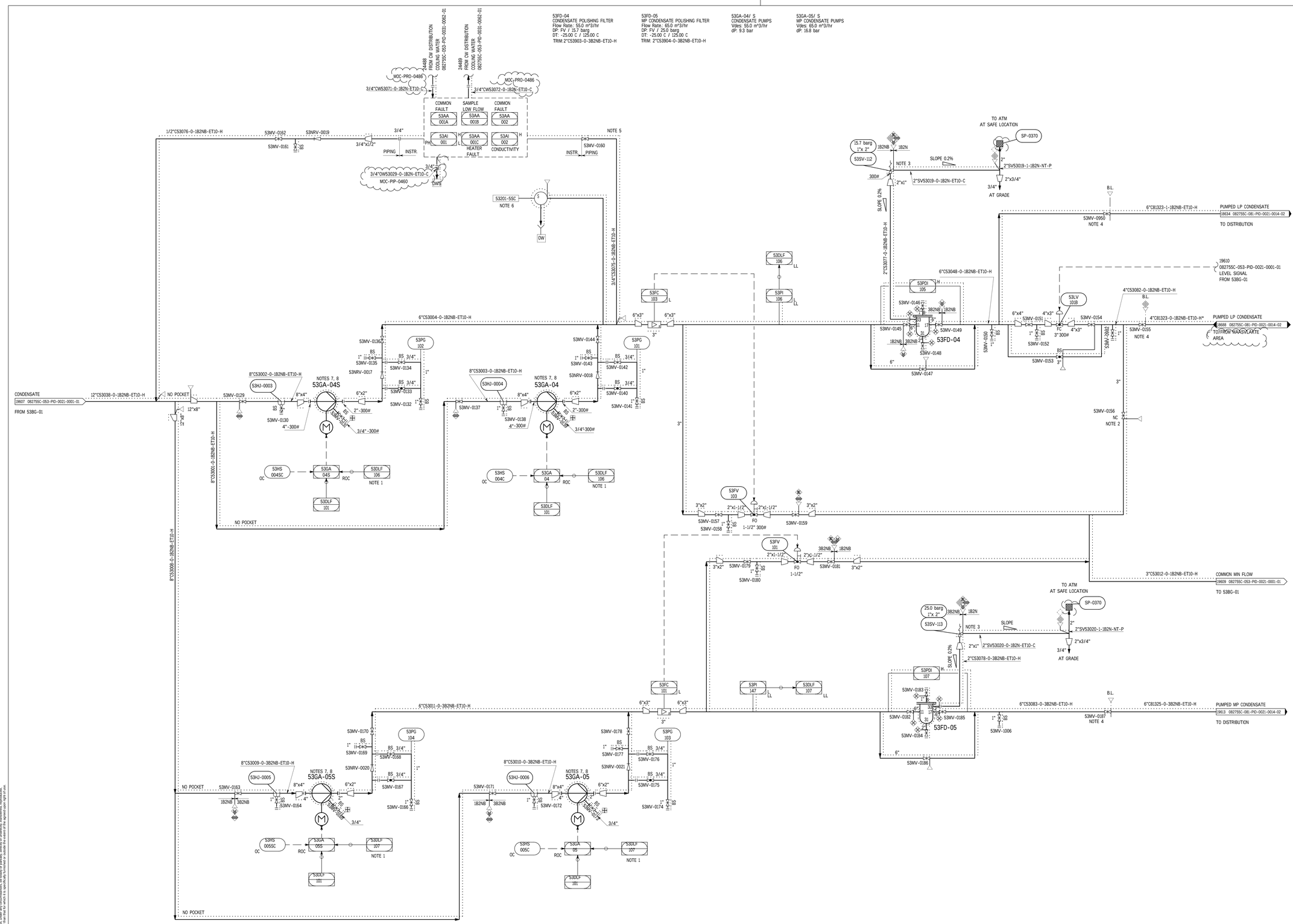

GENERAL NOTES

- FOR GENERAL NOTES AND SYMBOLS REFER TO P&ID'S 082755C-000-PID-0021-0001/0002/0003.
- ALL INSTRUMENT NOZZLES SHOWN ON EQUIPMENT ARE RATING 300# MINIMUM.
- ALL LOCAL ELECTRONIC INDICATORS HAVE TO BE INSTALLED IN A LOCATION ACCESSIBLE BY OPERATORS (I.E. GROUND LEVEL OR NEAR PLATFORM).
- FLANGES SHALL BE AT LEAST 300# FOR ALL PIPING DRAINS WITH SIZE LOWER THAN 2".
- THE RATING OF THE SAFETY VALVE INLET/OUTLET FLANGES SHALL BE THE SAME OF THE RESPECTIVE INLET/OUTLET LINES RATING UNLESS OTHERWISE SPECIFIED.
- ALL FLANGES/JOINTS THAT ARE ENVISAGED ON THE PIPING IN HYDROCARBON/CHEMICAL SERVICE, WILL BE PROVIDED OVER THE PAVED AREA WITHIN THE PROJECT BATTERY LIMIT.

NOTES:

1. SPARE PUMP IS STARTED AUTOMATICALLY IN CASE OF FAILURE OF THE DUTY ONE (NOT RUNNING).
2. LINE IS USED IN CASE OF CONDENSATE IMPORT FROM NEXBTL1 PLANT.
3. 1M OF PIPING LENGHT MINIMUM TO BE TRACED.
4. BL ARRANGEMENT USED FOR COMMISSIONING/PRECOMMISSIONING/START-UP PHASE.
5. ANALYZER SAMPLE NOZZLE ARRANGEMENT ACCORDING TO 082755C-000-JSD-1300-0002 STD-139C-0028 & STD-139C-0040.
6. FOR SAMPLE DETAILS REFER TO PID 082755C-053-PID-0021-0075.
7. FOR DETAILED ARRANGEMENT OF API PLAN REFER TO 082755C-053-PID-0021-0075-01.
8. PUMP TO BE ELECTRICALLY TRACED AND INSULATED, ELECTRICAL TRACING NOT INCLUDED IN PUMP MFR SCOPE OF SUPPLY. PUMP CASING REMOVABLE THERMAL BLANKET INCLUDED IN PUMP MANUFACTURER SCOPE OF SUPPLY, SUPPLIED LOOSE. PUMP DRAIN INSULATION IN T.EN SCOPE OF SUPPLY, OUT OF VENDOR SCOPE.

53DLF 101	CONDENSATE PUMPS 53GA-04/S AND MP CONDENSATE PUMPS 53GA-05/S SHUTDOWN
53DLF 106	CONDENSATE PUMP 53GA-04/S AUTOSTART
53DLF 107	MP CONDENSATE PUMP 53GA-05/S AUTOSTART

Segment Breaks

- End of Group
- Nominal Diameter
- Piping Materials Class
- Max Design Temp. or Press.
- Heat Tracing
- Insulation Requirement
- Coating Requirement
- Supply Responsibility
- Commissioning package
- Design Responsibility
- Norm operating temp or press

CONFIDENTIAL

EQUIPMENT LIST

PUMPS	FILTER				
53GA-04	53FD-04				
53GA-04S	53FD-05				
53GA-05					
53GA-05S					

REV.	DATE	DESCRIPTION	PREP	CKD	APPR
2	23/04/2024	ISSUE FOR CONSTRUCTION 3	F.G.	S.T./F.F.	C.M./M.L.
1	03/10/2023	ISSUE FOR CONSTRUCTION 2	C.A.T.	S.T./E.S.	A.C./M.L.
0	21/04/2023	ISSUE FOR CONSTRUCTION 1	C.A.T	S.T./E.S.	A.C./M.L.
E	22/11/2022	ISSUE FOR DETAIL DESIGN	C.A.T.	S.T./E.S.	A.C./M.L.
D	31/03/2022	ISSUE FOR HAZOP	C.A.T.	S.T./E.S.	A.C./M.L.

NESTE

T.EN TECHNIP ENERGIES

RDCG (Rotterdam Capacity Growth)
NESTE

UTILITIES MNA
CONDENSATE PUMPS
PIPING & INSTRUMENT DIAGRAM

TPIT Drawing No						Page	Rev.
082755C	053	PID	00	21	0001	3 of 7	2
Project	Unit	Doc. Type	Disc	Subj	Ser.No		

NESTE Drawing No

Site	Unit	Doc. Type	Drawing Code	Seq.No
2305		PID		

The present document or drawing is property of TECHNIP ENERGIES ITALY S.p.A. and shall not, under any circumstances, be sold or partially or totally or in any way reproduced, copied, disclosed or used, without its prior written consent, for any purpose and in any way other than that for which it is specifically furnished or outside the extent of the signed contract right of use.

53PA-02
MNA 10 BAR TO LP STEAM DESUPERHEATER

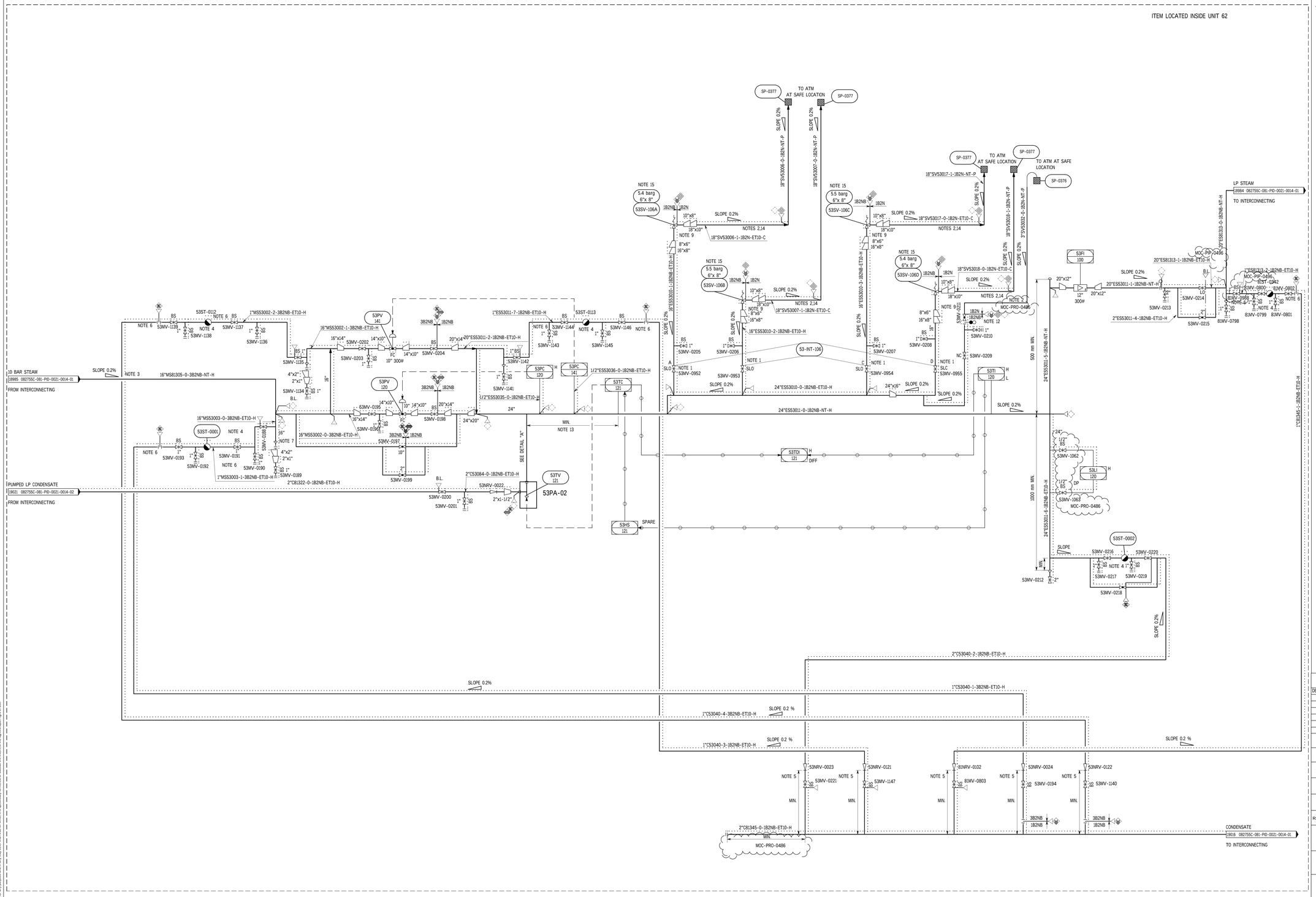

GENERAL NOTES

- FOR GENERAL NOTES AND SYMBOLS REFER TO P&ID'S 082755C-000-PID-0021-0001/0002/0003.
- ALL INSTRUMENT NOZZLES SHOWN ON EQUIPMENT ARE RATING 300# MINIMUM.
- ALL LOCAL ELECTRONIC INDICATOR HAVE TO BE INSTALLED IN A LOCAL ACCESSIBLE BY OPERATORS (I.E. GROUND LEVEL OR NEAR PLATFORM).
- FLANGES SHALL BE AT LEAST 300# FOR ALL PIPING DRAWS WITH SIZE LOWER THAN 2".
- THE RATING OF THE SAFETY VALVE INLET/OUTLET LINES RATING UNLESS OTHERWISE SPECIFIED.
- ALL FLANGES/JOINTS THAT ARE ENVISAGED ON THE PIPING HYDROCARBON/CHEMICAL SERVICE, WILL BE PROVIDED OVER THE PAVED AREA WITHIN THE PROJECT BATTERY LIMIT.

NOTES:

MOC-PRO-0486

1. BLOCK VALVES ARE KEY INTERLOCKED TO ENSURE THAT AT LEAST THREE SAFETY VALVE ARE IN OPERATION.
2. PROVIDE 6MM WEEP HOLE AT LOW POINT OR RELIEF VALVE DISCHARGE LINE TO ATMOSPHERE.
3. LINE TO BE SLOPED TOWARD THE STEAM TRAP.
4. STRAINER SUPPLIED WITH TRAP.
5. CHECK VALVE TO BE LOCATED AT HIGHEST POINT AS CLOSE AS POSSIBLE TO CONDENSATE RETURN HEADER.
6. STEAM TRAP INLET AND OUTLET LINE (STEAM/CONDENSATE) TO BE INSTALLED IN ORDER TO HAVE COMMON INSULATION.
7. FOR PIPING CONDENSATE POT DETAILS REFER TO ASSEMBLY SHOWN ON 082755C-STD-1380-0010 PART OF GENERAL DESIGN RULES FOR PIPING (082755C-000-JSD-1300-0002).
8. TWO PHASE FLOW ANCHOR SECURELY.
9. 1M OF PIPING LENGHT MINIMUM TO BE TRACED.
10. DELETED.
11. DISTANCE FROM C/L PIPING TO NOZZLE BY DESUPERHEATER VENDOR/PIPING SPECIALIST.
12. VALVE TO BE USED DURING START-UP.
13. 1 METER MINIMUM STREIGHT RUN UPSTREAM DESUPERHEATER AND 4 METERS MINIMUM STREIGHT RUN DOWNSTREAM DESUPERHEATER TO BE PROVIDED. MINIMUM DISTANCE FOR TEMPERATURE TRANSMITTER SHALL BE 10 METERS.
14. OUTLET LINE TO BE TRACED "ET10-C" UP TO WEEP HOLE.
15. PILOT OPERATED VALVE SUPPLIED WITH INTEGRAL PILOT SENSE LINE.

Segment Breaks

- End of Group
- Nominal Diameter
- Piping Materials Class
- Max Design Temp. or Press.
- Heat Tracing
- Insulation Requirement
- Coating Requirement
- Supply Responsibility
- Commissioning package
- Design Responsibility
- Norm operating temp or press

CONFIDENTIAL

EQUIPMENT LIST

DESUPERHEATER					
53PA-02					

REV.	DATE	DESCRIPTION	PREP	CKD	APPR
2	23/04/2024	ISSUE FOR CONSTRUCTION 3	F.G.	S.T./F.F.	C.M./M.L.
1	03/10/2023	ISSUE FOR CONSTRUCTION 2	C.A.T.	S.T./E.S.	A.C./M.L.
0	21/04/2023	ISSUE FOR CONSTRUCTION 1	C.A.T.	S.T./E.S.	A.C./M.L.
E	22/11/2022	ISSUE FOR DETAIL DESIGN	C.A.T.	S.T./E.S.	A.C./M.L.
D	11/03/2022	ISSUE FOR HAZOP	C.A.T.	S.T./E.S.	A.C./M.L.

NESTE

TECHNIP ENERGIES

RDCG (Rotterdam Capacity Growth)
NESTE

UTILITIES MNA

10 BAR TO LP STEAM LET DOWN STATION

PIPING & INSTRUMENT DIAGRAM

TPIT Drawing No						Page	Rev.
082755C	053	PID	00	21	0001	4 of 7	2
Project	Unit	Doc. Type	Disc	Subj	Ser.No		

NESTE Drawing No				
2305		PID		
Site	Unit	Doc. Type	Drawing Code	Seq.No

The present document or drawing is property of TECHNIP ENERGIES ITALY S.p.A. and shall not, under any circumstances, be sold or partially directly or indirectly, transferred, conveyed, copied, disclosed or used, without its prior written consent, for any purpose and in any way other than that for which it is specifically furnished or outside the extent of the agreed upon right of use.

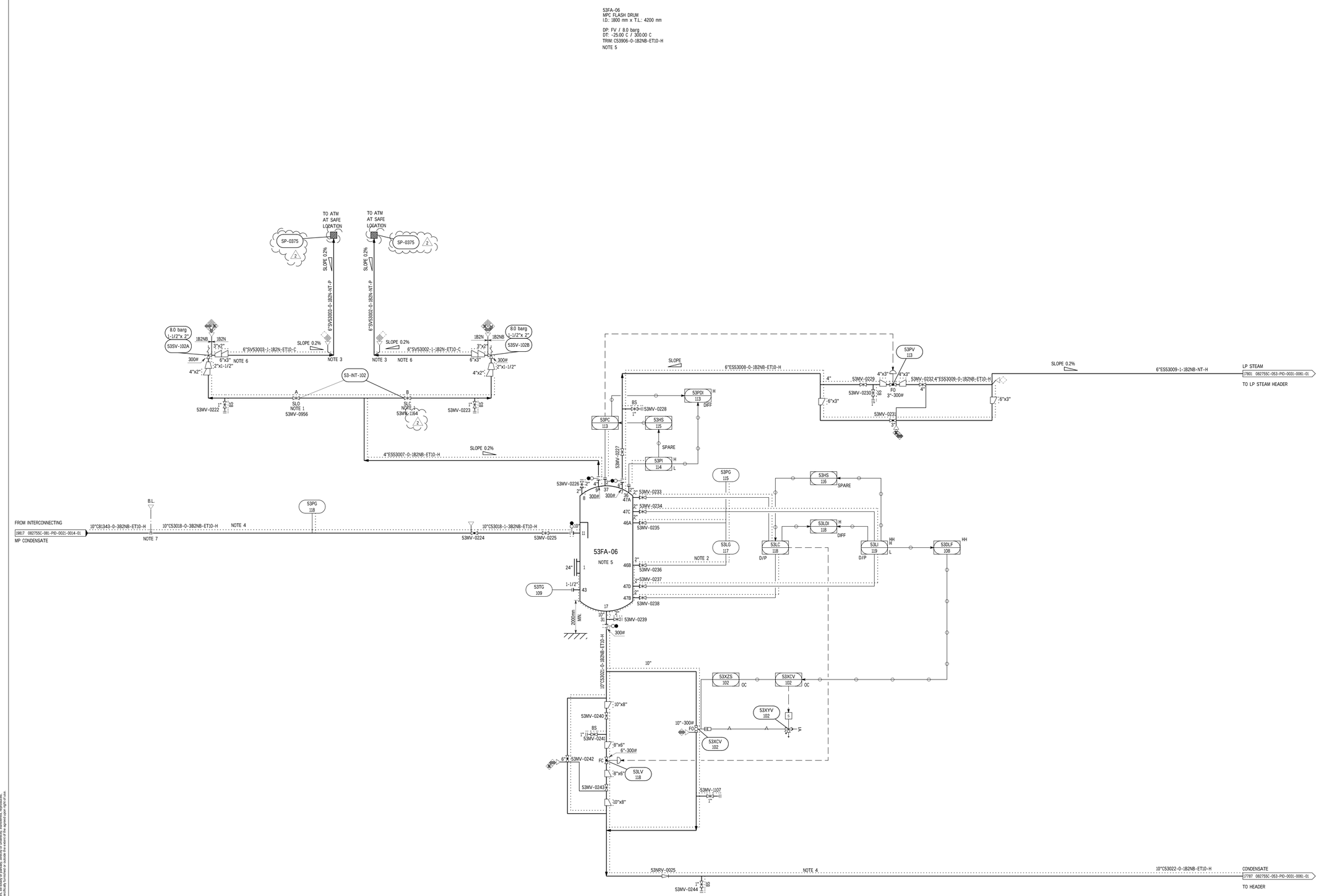

GENERAL NOTES

- FOR GENERAL NOTES AND SYMBOLS REFER TO P&ID'S 082755C-000-PID-0021-0001/0002/0003.
- ALL INSTRUMENT NOZZLES SHOWN ON EQUIPMENT ARE RATING 300# MINIMUM.
- ALL LOCAL ELECTRONIC INDICATORS HAVE TO BE INSTALLED IN A LOCATION ACCESSIBLE BY OPERATORS (I.E. GROUND LEVEL OR NEAR PLATFORM).
- FLANGES SHALL BE AT LEAST 300# FOR ALL PIPING DRAINS WITH SIZE LOWER THAN 2".
- THE RATING OF THE SAFETY VALVE INLET/OUTLET FLANGES SHALL BE THE SAME OF THE RESPECTIVE INLET/OUTLET LINES RATING UNLESS OTHERWISE SPECIFIED.
- ALL FLANGES/JOINTS THAT ARE ENVISAGED ON THE PIPING IN HYDROCARBON/CHEMICAL SERVICE, WILL BE PROVIDED OVER THE PAVED AREA WITHIN THE PROJECT BATTERY LIMIT.

NOTES:

1. BLOCK VALVES ARE KEY INTERLOCKED TO ENSURE THAT AT LEAST ONE SAFETY VALVE IS IN OPERATION.
2. LEVEL MEASUREMENTS NOZZLES AT SAME LEVEL.
3. PROVIDE 6 MM WEEP HOLE AT LOW POINT OF RELIEF VALVE DISCHARGE LINE TO ATMOSPHERE.
4. MIXED PHASE.
5. VESSEL IS ELECTRICALLY TRACED FROM THE BOTTOM HEAD UP TO LOW LOW LIQUID LEVEL (LL) TO AVOID FREEZING DURING SHUT-DOWN.
6. OUTLET LINE TO BE TRACED "ET10-C" UP TO WEEP HOLE.
7. BL ARRANGEMENT USED FOR COMMISSIONING/PRECOMMISSIONING/START-UP PHASE.

53DLF 108	MPC FLASH DRUM 53FA-06 CONDENSATE OUTLET OPENING

Segment Breaks

- End of Group
- Nominal Diameter
- Piping Materials Class
- Max Design Temp. or Press.
- Heat Tracing
- Insulation Requirement
- Coating Requirement
- Supply Responsibility
- Commissioning package
- Design Responsibility
- Norm operating temp or press

CONFIDENTIAL

EQUIPMENT LIST

VESSELS
53FA-06

REV.	DATE	DESCRIPTION	PREP	CKD	APPR
2	23/04/2024	ISSUE FOR CONSTRUCTION 3	F.G.	S.T./F.F.	C.M./M.L.
1	03/10/2023	ISSUE FOR CONSTRUCTION 2	C.A.T.	S.T./E.S.	A.C./M.L.
0	21/04/2023	ISSUE FOR CONSTRUCTION 1	C.A.T.	S.T./E.S.	A.C./M.L.
D	22/11/2022	ISSUE FOR DETAIL DESIGN	C.A.T.	S.T./E.S.	A.C./M.L.
C	11/03/2022	ISSUE FOR HAZOP	C.A.T.	S.T./E.S.	A.C./M.L.

NESTE

TECHNIP ENERGIES

RDCG (Rotterdam Capacity Growth)
NESTE

UTILITIES MNA

MP CONDENSATE COLLECTION SYSTEM
PIPING & INSTRUMENT DIAGRAM

TPIT Drawing No						Page	Rev.
082755C	053	PID	00	21	0001	5 of 7	2
Project	Unit	Doc. Type	Disc	Subj	Ser.No		

NESTE Drawing No				
2305		PID		
Site	Unit	Doc. Type	Drawing Code	Seq.No

This present document or drawing is property of TECHNIP ENERGIES ITALY S.p.A. and shall not, under any circumstances, be lodged or partially, directly or indirectly, transferred, reproduced, copied, disclosed or sold, without its prior written consent, for any purpose and in any way other than that for which it is specifically transmitted or outside the extent of the agreed upon right of use.

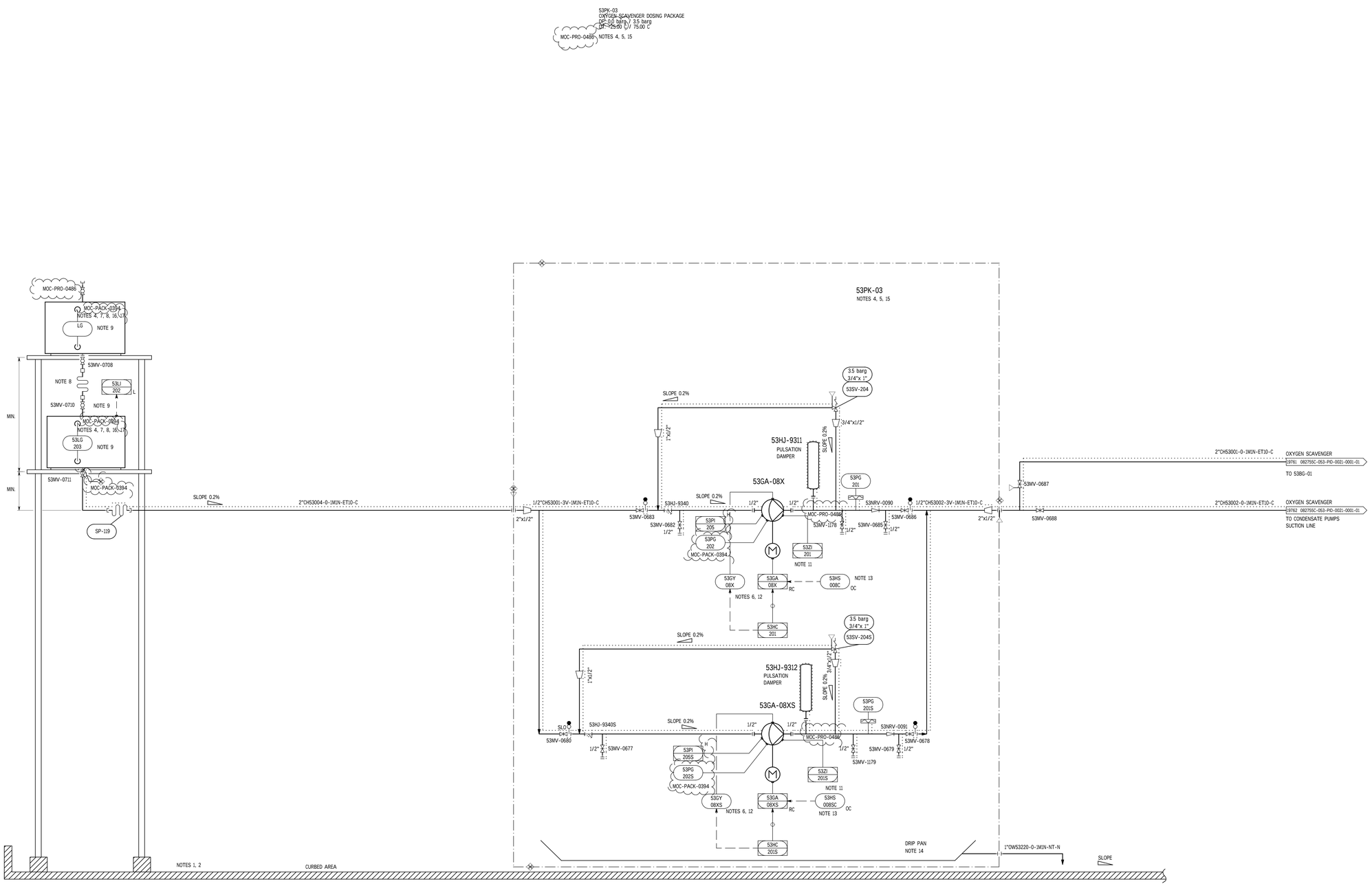

GENERAL NOTES

- FOR GENERAL NOTES AND SYMBOLS REFER TO P&ID'S 082755C-000-PID-0021-0001/0002/0003.
- ALL INSTRUMENT NOZZLES SHOWN ON THE EQUIPMENT ARE RATING 300# MINIMUM.
- PACKAGE DETAILS ARE PRELIMINARY AND SHALL BE CONFIRMED BY VENDOR.
- ALL LOCAL ELECTRONIC INDICATORS HAVE TO BE INSTALLED IN A LOCATION ACCESSIBLE BY OPERATORS (I.E. GROUND LEVEL OR NEAR PLATFORM).
- FLANGES SHALL BE AT LEAST RATING 300# FOR ALL THE PIPING DRAINS WITH SIZE LOWER THAN 2".
- THE RATING OF THE SAFETY VALVE INLET/OUTLET FLANGES SHALL BE THE SAME OF THE RESPECTIVE SAFETY VALVE INLET/OUTLET LINES RATING UNLESS OTHERWISE SPECIFIED.
- ALL FLANGES/JOINT THAT ARE ENVISAGED ON THE PIPING IN HYDROCARBON/CHEMICAL SERVICE, WILL BE PROVIDED OVER THE PAVED AREA WITHIN THE PROJECT BATTERY LIMIT.

NOTES:

1. PROTECTIVE COATING OF CURBED AREA TO BE PROVIDED.
2. COMMON CURBED AREA FOR 53PK-03 AND 53PK-04. CURBED AREA DIMENSION TO BE ADEQUATE TO CONTAIN 11 M3 OF CHEMICAL STORAGE.
3. DELETED.
4. DOSING PACKAGE AS WELL AS CHEMICAL CONTAINERS WILL BE LOCATED IN A SHELTERED AREA. SHELTER IS OUT OF VENDOR SCOPE.
5. ALL EQUIPMENT INCLUDED IN THE PACKAGE SHALL BE ELECTRICALLY TRACED TO MANTAIN THE MINIMUM TEMPERATURE OF 10°C, REQUIRED TO AVOID CHEMICAL CRYSTALS FORMATION.
6. REMOTE STROKE ADJUSTEMENT FROM DCS IS PROVIDED.
7. ISOTANK IN CHEMICAL VENDOR SCOPE SUPPLY. TYPICAL ARRANGEMENT, TO BE FINALIZED AFTER CHEMICAL VENDOR SELECTION.
8. CHEMICAL CONTAINERS ARE RETURNABLE CONTAINERS. TANKS ARE SUPPLIED WITH EXTERNAL STEEL FRAME. TANKS ARE STACKED ONE ABOVE THE OTHER TO PROVIDE CHEMICAL FLOW INTO THE LOWER TANK BY GRAVITY. TANKS HAVE VENDOR STANDARD TANK COUPLINGS THAT ALLOW ONE TANK TO BE STACKED ABOVE THE OTHER AND PROVIDED WITH QUICK SNAP FIT CONNECTION.
9. LEVEL GAUGE AND LEVEL TRANSMITTER IN CHEMICAL VENDOR SCOPE OF SUPPLY.
10. DELETED.
11. PUMP STROKE POSITION.
12. PUMP STROKE CAPACITY CONTROL.
13. HAND SWITCH IN LEWA SCOPE OF SUPPLY.
14. DRIP PAN UNDER PUMP SKID. DIMENSIONED FOR SMALL SPILLAGE. TO BE PROVIDED BY VENDOR.
15. COMPLETE PACKAGE IS FULLY DREINABLE.
16. SUITABLE MEASURES TO AVOID FREEZING TO BE PROVIDED.
17. PURCHASED BY NESTE
MOC-PACK-0394

Segment Breaks

- End of Group
- Nominal Diameter
- Piping Materials Class
- Max Design Temp. or Press.
- Heat Tracing
- Insulation Requirement
- Coating Requirement
- Supply Responsibility
- Commissioning package
- Design Responsibility
- Norm operating temp or press

CONFIDENTIAL

EQUIPMENT LIST

PACKAGE					
53PK-03					

REV.	DATE	DESCRIPTION	PREP	CKD	APPR
2	23/04/2024	ISSUE FOR CONSTRUCTION 3	F.G.	S.T./F.F.	C.M./M.L.
1	16/10/2023	ISSUE FOR CONSTRUCTION 2	C.A.T.	S.T./E.S.	A.C./M.L.
0	21/04/2023	ISSUE FOR CONSTRUCTION 1	C.A.T.	S.T./E.S.	A.C./M.L.
D	22/11/2022	ISSUE FOR DETAIL DESIGN	C.A.T.	S.T./E.S.	A.C./M.L.
C	11/03/2022	ISSUE FOR HAZOP	C.A.T.	S.T./E.S.	A.C./M.L.

NESTE

TECHNIP ENERGIES

RDCG (Rotterdam Capacity Growth)
NESTE

UTILITIES MNA

OXYGEN SCAVENGER DOSING PACKAGE

PIPING & INSTRUMENT DIAGRAM

TPIT Drawing No						Page	Rev.
082755C	053	PID	00	21	0001	6 of 7	2
Project	Unit	Doc. Type	Disc	Subj	Ser.No		

NESTE Drawing No				
2305		PID		
Site	Unit	Doc. Type	Drawing Code	Seq.No

This present document or drawing is property of TECHNIP ENERGIES ITALY S.p.A. and contains, under its conditions, no trade or profit, directly or indirectly, transferred, reproduced, copied, disclosed or used, without its prior written consent, for any purpose and in any way other than that for which it is specifically furnished or available the extent of the agreed upon right of use.

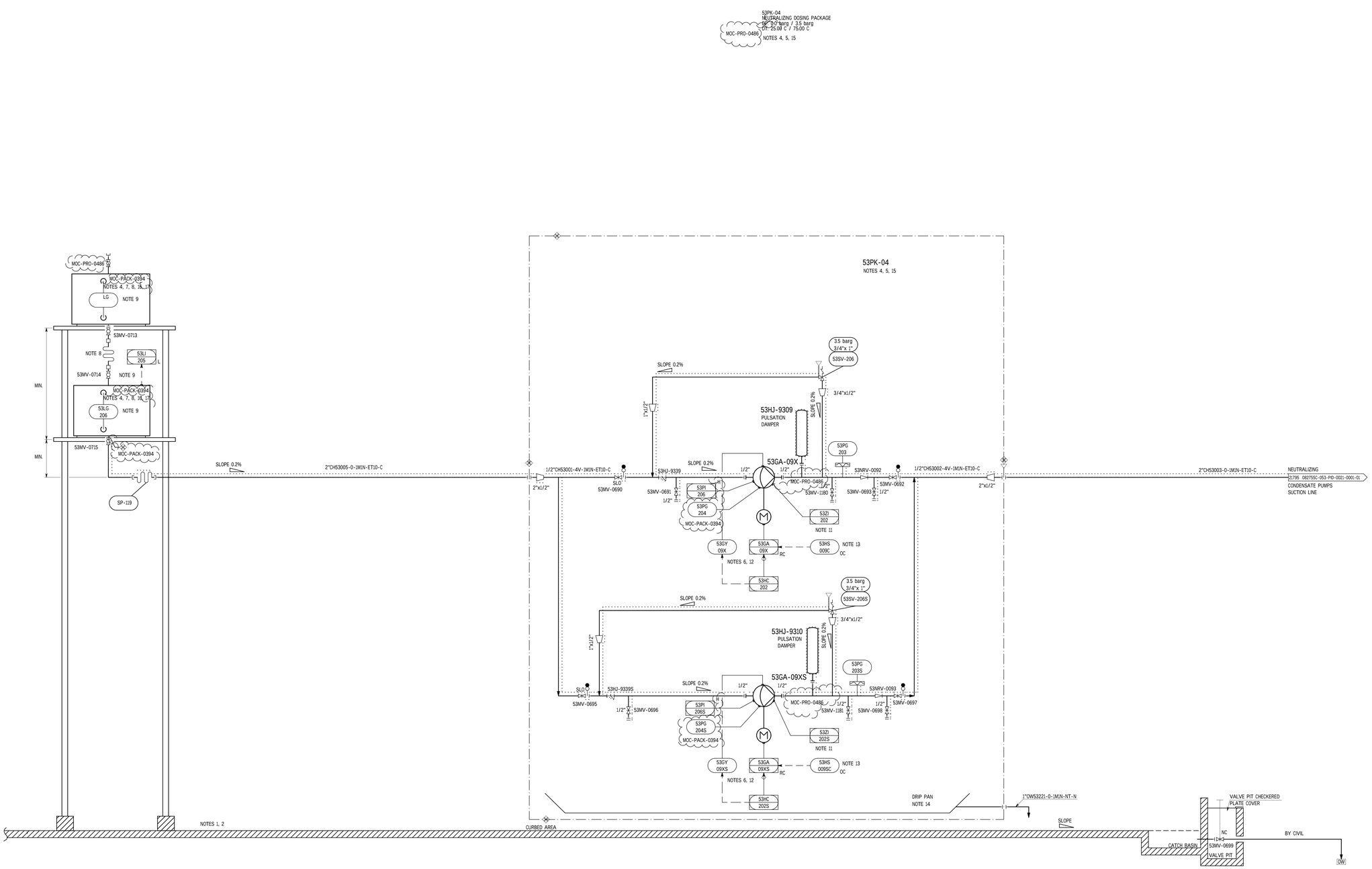

GENERAL NOTES

- FOR GENERAL NOTES AND SYMBOLS REFER TO P&ID'S 082755C-000-PID-0021-0001/0002/0003.
- ALL INSTRUMENT NOZZLES SHOWN ON THE EQUIPMENT ARE RATING 300# MINIMUM.
- PACKAGE DETAILS ARE PRELIMINARY AND SHALL BE CONFIRMED BY VENDOR.
- ALL LOCAL ELECTRONIC INDICATORS HAVE TO BE INSTALLED IN A LOCATION ACCESSIBLE BY OPERATORS (I.E. GROUND LEVEL OR NEAR PLATFORM).
- FLANGES SHALL BE AT LEAST RATING 300# FOR ALL THE PIPING DRAINS WITH SIZE LOWER THAN 2".
- THE RATING OF THE SAFETY VALVE INLET/OUTLET FLANGES SHALL BE THE SAME OF THE RESPECTIVE SAFETY VALVE INLET/OUTLET LINES RATING UNLESS OTHERWISE SPECIFIED.
- ALL FLANGES/JOINT THAT ARE ENVISAGED ON THE PIPING IN HYDROCARBON/CHEMICAL SERVICE, WILL BE PROVIDED OVER THE PAVED AREA WITHIN THE PROJECT BATTERY LIMIT.

NOTES:

1. PROTECTIVE COATING OF CURBED AREA TO BE PROVIDED.
2. COMMON CURBED AREA FOR 53PK-03 AND 53PK-04. CURBED AREA DIMENSION TO BE ADEQUATE TO CONTAIN 1.1 M3 OF CHEMICAL STORAGE.
3. DELETED.
4. DOSING PACKAGE AS WELL AS CHEMICAL CONTAINERS WILL BE LOCATED IN A SHELTERED AREA. SHELTER IS OUT OF VENDOR SCOPE.
5. ALL EQUIPMENT INCLUDED IN THE PACKAGE SHALL BE ELECTRICALLY TRACED TO MAINTAIN THE MINIMUM TEMPERATURE OF 10°C, REQUIRED TO AVOID CHEMICAL CRYSTALS FORMATION.
6. REMOTE STROKE ADJUSTEMENT FROM DCS IS PROVIDED.
7. ISOTANK IN CHEMICAL VENDOR SCOPE SUPPLY. TYPICAL ARRANGEMENT, TO BE FINALIZED AFTER CHEMICAL VENDOR SELECTION.
8. CHEMICAL CONTAINERS ARE RETURNABLE CONTAINERS. TANKS ARE SUPPLIED WITH EXTERNAL STEEL FRAME. TANKS ARE STACKED ONE ABOVE THE OTHER TO PROVIDE CHEMICAL FLOW INTO THE LOWER TANK BY GRAVITY. TANKS HAVE VENDOR STANDARD TANK COUPLINGS THAT ALLOW ONE TANK TO BE STACKED ABOVE THE OTHER AND PROVIDED WITH QUICK SNAP FIT CONNECTION.
9. LEVEL GAUGE AND LEVEL TRANSMITTER IN CHEMICAL VENDOR SCOPE OF SUPPLY.
10. DELETED.
11. PUMP STROKE POSITION.
12. PUMP STROKE CAPACITY CONTROL.
13. HAND SWITCH IN LEWA SCOPE OF SUPPLY.
14. DRIP PAN UNDER PUMP SKID. DIMENSIONED FOR SMALL SPILLAGE. TO BE PROVIDED BY VENDOR.
15. COMPLETE PACKAGE IS FULLY DREINABLE.
16. SUITABLE MEASURES TO AVOID FREEZING TO BE PROVIDED.
17. PURCHASED BY NESTE.
MOC-PACK-0394

Segment Breaks
- End of Group
- Nominal Diameter
- Piping Materials Class
- Max Design Temp. or Press.
- Heat Tracing
- Insulation Requirement
- Coating Requirement
- Supply Responsibility
- Commissioning package
- Design Responsibility
- Norm operating temp or press

CONFIDENTIAL

EQUIPMENT LIST

PACKAGE
53PK-04

REV.	DATE	DESCRIPTION	PREP	CKD	APPR
2	23/04/2024	ISSUE FOR CONSTRUCTION 3	F.G.	S.T./F.F.	C.M./M.L.
1	16/10/2023	ISSUE FOR CONSTRUCTION 2	C.A.T.	S.T./E.S.	A.C./M.L.
0	21/04/2023	ISSUE FOR CONSTRUCTION 1	C.A.T.	S.T./E.S.	A.C./M.L.
A	22/11/2022	ISSUE FOR DETAIL DESIGN	C.A.T.	S.T./E.S.	A.C./M.L.

NESTE

TECHNIP ENERGIES

RDCG (Rotterdam Capacity Growth)
NESTE

UTILITIES MNA

NEUTRALIZING DOSING PACKAGE
PIPING & INSTRUMENT DIAGRAM

TPIT Drawing No						Page	Rev.
082755C	053	PID	00	21	0001	7 of 7	2
Project	Unit	Doc. Type	Disc	Subj	Ser.No		

NESTE Drawing No				
2305		PID		
Site	Unit	Doc. Type	Drawing Code	Seq.No

TECHNIP ENERGIES ITALY S.p.A - 00148 ROMA - Viale Castello della Magliana, 68

This present document or drawing is property of TECHNIP ENERGIES ITALY S.p.A. and shall not, under any circumstances, be lodged or partially, directly or indirectly, transferred, reproduced, copied, disclosed or used, without its prior written consent, for any purpose not in any way other than that for which it is specifically transmitted or outside the scope of the agreed upon right of use.

1 22/09/2023 ISSUE FOR CONSTRUCTION 2 C.A.T. S.T./F.R. A.C./M.L.

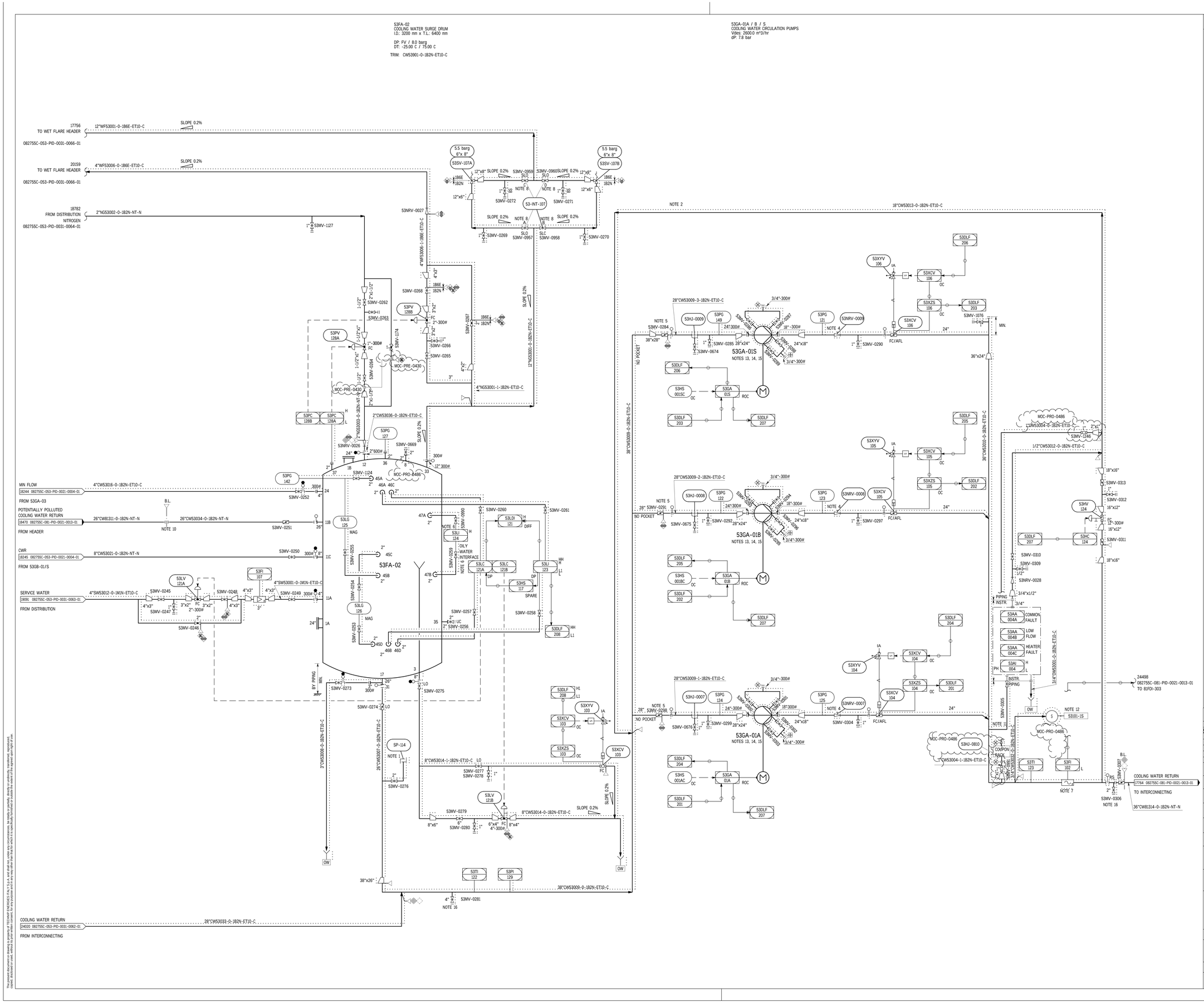

GENERAL NOTES

- FOR GENERAL NOTES AND SYMBOLS REFER TO P&ID'S 082755C-000-PID-0021-0001/0002/0003.
- ALL INSTRUMENT NOZZLES SHOWN ON EQUIPMENT ARE RATING 300# MINIMUM.
- ALL LOCAL ELECTRONIC INDICATORS HAVE TO BE INSTALLED IN A LOCATION ACCESSIBLE BY OPERATORS (I.E. GROUND LEVEL OR NEAR PLATFORM).
- FLANGES SHALL BE AT LEAST 300# FOR ALL PIPING DRAINS WITH SIZE LOWER THAN 2".
- THE RATING OF THE SAFETY VALVE INLET/OUTLET FLANGES SHALL BE THE SAME OF THE RESPECTIVE INLET/OUTLET LINES RATING UNLESS OTHERWISE SPECIFIED.
- ALL FLANGES/JOINTS THAT ARE ENVISAGED ON THE PIPING IN HYDROCARBON/CHEMICAL SERVICE, WILL BE PROVIDED OVER THE PAVED ARE WITHIN THE PROJECT BATTERY LIMIT.

NOTES:

1. PROVISIONS FOR ADDING LIQUID CORROSION INHIBITOR.
2. LINE TO BE USED FOR PUMP START-UP AND FOR PUMP BYPASS DURING GENERAL POWER FAILURE.
3. DELETED.
4. DUAL PLATE CHECK VALVE.
5. BUTTERFLY VALVE INSTALLED WITH ST EM IN HORIZONTAL POSITION.
6. IN CASE OF LIQUID HYDROCARBON DETECTION BY OIL/WATER INTERFACE LEVEL, OIL WILL BE REMOVED MANUALLY OPENING THE OVERFLOW ON/OFF VALVE 53XCV-103 THAT WILL BE AUTOMATICALLY CLOSED ONCE LOW LEVEL IS REACHED (THROUGH 53DLF208).
7. ULTRASONIC TYPE FLOW ELEMENT (CLAMP ON TYPE).
8. BLOCK VALVE ARE KEY INTERLOCKED TO ENSURE THAT ONE SAFETY VALVE IS IN OPERATION STATE AT ALL THE TIME.
9. DELETED.
10. BL ARRANGEMENT USED FOR COMMISSIONING/PRECOMMISSIONING/START-UP PHASE.
11. ANALYZER SAMPLE NOZZLE ARRANGEMENT ACCORDING 082755C-000-JSD-1300-0002 STD-139C-0028 & 139C-0040.
12. FOR SAMPLE DETAILS REFER TO PID 082755C-053-PID-0021-0075.
13. FOR DETAILED ARRANGEMENT OF API PLAN REFER TO 082755C-053-PID-0021-0075-01.
14. FOR DETAILED ARRANGEMENT OF INSTRUMENTATION REFER TO 082755C-053-PID-0041-0081-01.
15. PUMP TO BE ELECTRICALLY TRACED AND INSULATED, ELECTRICAL TRACING NOT INCLUDED IN PUMP MFR SCOPE OF SUPPLY. PUMP CASING REMOVABLE THERMAL BLANKET INCLUDED IN PUMP MANUFACTURER SCOPE OF SUPPLY, SUPPLIED LOOSE. PUMP VENT AND DRAIN INSULATION IN T.EN SCOPE OF SUPPLY, OUT OF VENDOR SCOPE.
16. TO BE USED ALSO FOR PRECOMMISSIONING ACTIVITIES.

53DLF 201	COOLING WATER CIRCULATION PUMP 53GA-01A SHUTDOWN
53DLF 202	COOLING WATER CIRCULATION PUMP 53GA-01B SHUTDOWN
53DLF 203	COOLING WATER CIRCULATION PUMP 53GA-01S SHUTDOWN
53DLF 204	COOLING WATER CIRCULATION PUMP 53GA-01A START
53DLF 205	COOLING WATER CIRCULATION PUMP 53GA-01B START
53DLF 206	COOLING WATER CIRCULATION PUMP 53GA-01S START
53DLF 207	EMERGENCY COOLING WATER PUMP 53GA-03 START
53DLF 208	COOLING WATER SURGE DRUM 53FA-02 PROTECTION FOR HIGH HIGH LIQUID LEVEL

Segment Breaks

- End of Group
- Nominal Diameter
- Piping Materials Class
- Max Design Temp. or Press.
- Heat Tracing
- Insulation Requirement
- Coating Requirement
- Supply Responsibility
- Commissioning package
- Design Responsibility
- Norm operating temp or press

CONFIDENTIAL

EQUIPMENT LIST

TANK	PUMPS
53FA-02	53GA-01A
	53GA-01B
	53GA-01S

REV.	DATE	DESCRIPTION	PREP	CKD	APPR
2	23/04/2024	ISSUE FOR CONSTRUCTION 3	F.G.	S.T./F.F.	C.M./M.L.
1	03/10/2023	ISSUE FOR CONSTRUCTION 2	C.A.T.	S.T./E.S.	A.C./M.L.
0	21/04/2023	ISSUE FOR CONSTRUCTION 1	C.A.T.	S.T./E.S.	A.C./M.L.
E	22/11/2022	ISSUE FOR DETAIL DESIGN	C.A.T.	S.T./E.S.	A.C./M.L.
D	11/03/2022	ISSUE FOR HAZOP	C.A.T.	S.T./E.S.	A.C./M.L.

NESTE

T.EN TECHNIP ENERGIES

RDCG (Rotterdam Capacity Growth) NESTE

UTILITIES MNA

CW PUMPS AND SURGE DRUM PIPING & INSTRUMENT DIAGRAM

TPIT Drawing No						Page	Rev.
082755C Project	053 Unit	PID Doc. Type	00 Disc	21 Subj	0002 Ser.No	1 of 3	2

NESTE Drawing No				
2305 Site	Unit	PID Doc. Type	Drawing Code	Seq.No

This document contains details or extracts of TECHNIP ENERGIES ITALY S.p.A. and of other other companies, its liability is partially disclaimed, and may be subject to copyright, proprietary or other rights. Content, for any purpose and in any manner, shall not be altered or used without the express written permission of TEN.

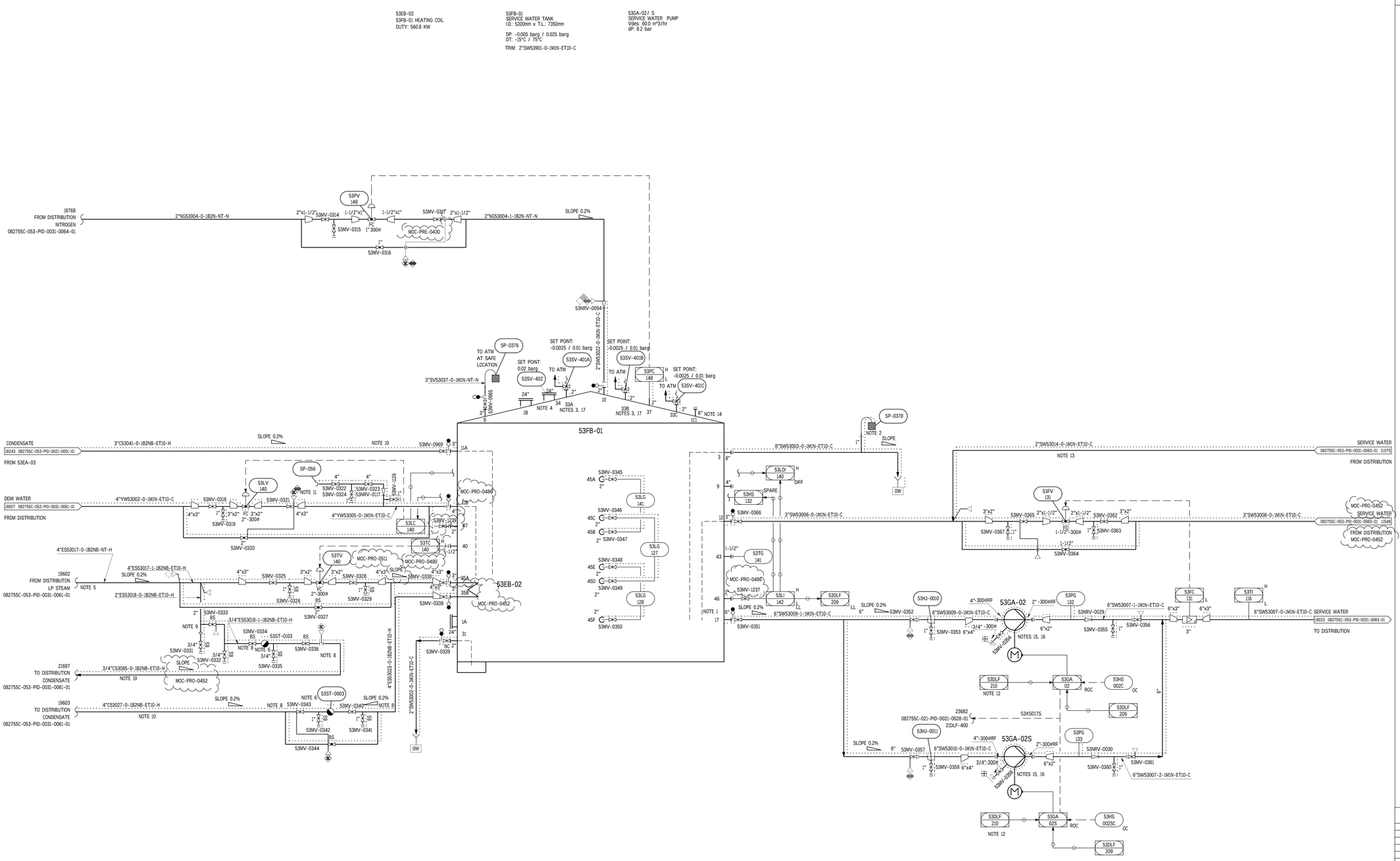

GENERAL NOTES

- FOR GENERAL NOTES AND SYMBOLS REFER TO P&ID'S 082755C-000-PID-0021-0001/0002/0003.
- ALL INSTRUMENT NOZZLES SHOWN ON EQUIPMENT ARE RATING 300# MINIMUM.
- ALL LOCAL ELECTRONIC INDICATORS HAVE TO BE INSTALLED IN A LOCATION ACCESSIBLE BY OPERATORS (I.E. GROUND LEVEL OR NEAR PLATFORM).
- FLANGES SHALL BE AT LEAST 300# FOR ALL PIPING DRAINS WITH SIZE LOWER THAN 2".
- THE RATING OF THE SAFETY VALVE INLET/OUTLET FLANGES SHALL BE THE SAME OF THE RESPECTIVE INLET/OUTLET LINES RATING UNLESS OTHERWISE SPECIFIED.
- ALL FLANGES/JOINTS THAT ARE ENVISAGED ON THE PIPING IN HYDROCARBON/CHEMICAL SERVICE, WILL BE PROVIDED OVER THE PAVED AREA WITHIN THE PROJECT BATTERY LIMIT.

NOTES:

1. VORTEX BREAKER TO BE PROVIDED ON NOZZLE 17.
2. SYPHON BREAKER. LOCATED AT HIGH POINT.
3. PRESSURE/VACUUM RELIEF VALVES (PVRV) BY MFR ACCORDING TO EN14015. SET PRESSURE 10/-2.5 mbarg. A BREATHER VALVE AS SPARE WILL BE PROVIDED.
4. SAFETY HATCH PROVIDED BY TANK VENDOR.
5. LINE TO BE SLOPED TOWARD THE STEAM TRAP.
6. STRAINER SUPPLIED WITH TRAP.
7. DELETED.
8. STEAM AND CONDENSATE LINE TO BE INSULATED ACCORDING TO 082755C-000-STD-1380-0010PART OF "GENERAL DESIGN RULES FOR PIPING" (082755C-000-JSD-1300-0002).
9. FOR PIPING CONDENSATE POT DETAILS REFER TO ASSEMBLY SHOWN ON 082755C-STD-1380-0010 PART OF GENERAL DESIGN RULES FOR PIPING (082755C-000-JSD-1300-0002).
10. TWO PHASE FLOW ANCHOR SECURELY.
11. TRUCK CONNECTION FOR DEMIN WATER SUPPLY IN CASE OF DEMIN WATER UNAVAILABILITY FROM UNIPER.
12. SPARE PUMP IS STARTED AUTOMATICALLY IN CASE OF FAILURE OF THE DUTY ONE (NOT RUNNING).
13. LINE USED DURING COMMISSIONING/PRECOMMISSIONING/START-UP PHASE.
14. CLEANING ACCESS.
15. FOR DETAILED ARRANGEMENT OF API PLAN REFER TO 082755C-053-PID-0021-0075-01.
16. PUMP TO BE ELECTRICALLY TRACED AND INSULATED. ELECTRICAL TRACING NOT INCLUDED IN PUMP MFR SCOPE OF SUPPLY. PUMP CASING REMOVABLE THERMAL BLANKET INCLUDED IN PUMP MANUFACTURER SCOPE OF SUPPLY, SUPPLIED LOOSE. PUMP DRAIN INSULATION IN T.EN SCOPE OF SUPPLY, OUT OF VENDOR SCOPE.
17. PRESSURE/VACUUM RELIEF VALVES (PVRV) ARE ELECTRICALLY TRACED.

530LF 209	SERVICE WATER PUMPS 53GA-02/S SHUT-DOWN
530LF 210	SERVICE WATER PUMP 53GA-02/S AUTOSTART
21DLF 400	21GA-16/S SHUTDOWN

Segment Breaks

- End of Group
- Nominal Diameter
- Piping Materials Class
- Max Design Temp. or Press.
- Heat Tracing
- Insulation Requirement
- Coating Requirement
- Supply Responsibility
- Commissioning package
- Design Responsibility
- Norm operating temp or press

CONFIDENTIAL

EQUIPMENT LIST
53EB-02

DRUM	PUMPS	COIL			
53FB-01	53GA-02				
	53GA-02S				

REV.	DATE	DESCRIPTION	PREP	CKD	APPR
2	23/04/2024	ISSUE FOR CONSTRUCTION 3	F.G.	S.T./F.F.	C.M./M.L.
1	03/10/2023	ISSUE FOR CONSTRUCTION 2	C.A.T.	S.T./E.S.	A.C./M.L.
0	21/04/2023	ISSUE FOR CONSTRUCTION 1	C.A.T.	S.T./E.S.	A.C./M.L.
E	22/11/2022	ISSUE FOR DETAIL DESIGN	C.A.T.	S.T./E.S.	A.C./M.L.
D	11/03/2022	ISSUE FOR HAZOP	C.A.T.	S.T./E.S.	A.C./M.L.

NESTE

T.EN TECHNIP ENERGIES

RDCG (Rotterdam Capacity Growth)
NESTE

UTILITIES MNA

SERVICE WATER TANK AND PUMPS
PIPING & INSTRUMENT DIAGRAM

TPIT Drawing No						Page	Rev.
082755C	053	PID	00	21	0002	3 of 3	2
Project	Unit	Doc. Type	Disc	Subj	Ser.No		

NESTE Drawing No				
2305		PID		
Site	Unit	Doc. Type	Drawing Code	Seq.No

This present document is TECHNIP ENERGIES ITALY S.p.A. property. It cannot be reproduced, disclosed or used, without its prior written consent, for any purpose and in any way other than that for which it is specifically furnished or outside the scope of the agreed upon right of use.

53EB-01
53FA-07 HEATING COIL
Duty: 80 kW
DP: FV / 5.5 barg
DT: -25 C / 260.00 C

53EX-01
53FA-07 EMERGENCY ELECTRIC HEATER
Duty: 80 kW
DP: BY VENDOR
DT: BY VENDOR

53FA-07
SAFETY SHOWER WATER DRUM
I.D.: 1700 mm x T.L.: 3600 mm

DP: / 0.7 barg
DT: -25.00 C / 75.00 C
TRIM:SSW53901-0-1MIN-ET10-C

53GA-06 / S
SAFETY SHOWER WATER PUMPS
Vdes: 25.0 m^3/hr
dP: 6.8 bar

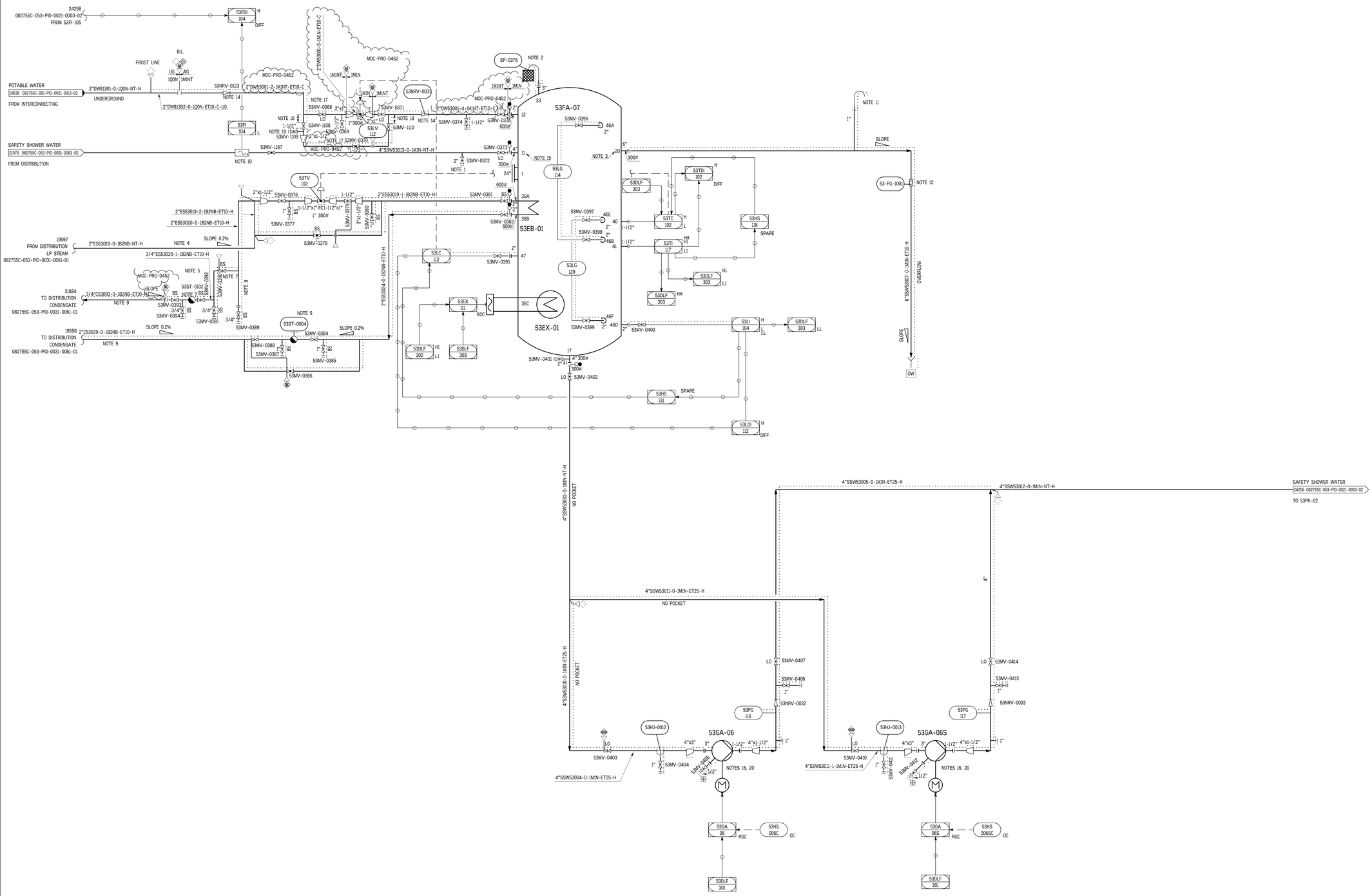

GENERAL NOTES

- FOR GENERAL NOTES AND SYMBOLS REFER TO P&ID'S 082755C-000-PID-0021-0001/0002/0003.
- ALL INSTRUMENT NOZZLES SHOWN ON EQUIPMENT ARE RATING 300# MINIMUM.
- ALL LOCAL ELECTRONIC INDICATORS HAVE TO BE INSTALLED IN A LOCATION ACCESSIBLE BY OPERATORS (I.E. GROUND LEVEL OR NEAR PLATFORM).
- FLANGES SHALL BE AT LEAST 300# FOR ALL PIPING DRAINS WITH SIZE LOWER THAN 2".
- ALL FLANGES/JOINTS THAT ARE ENVISAGED ON THE PIPING IN HYDROCARBON/CHEMICAL SERVICE, WILL BE PROVIDED OVER THE PAVED ARE WITHIN THE PROJECT BATTERY LIMIT.
- REDUCERS HAVE BEEN MODIFIED FROM CONCENTRIC TO ECCENTRIC ACCORDING TO PIPING STANDARD. THESE CHANGES HAVE NOT BEEN HIGHLIGHTED WITH REVISION CLOUD.

NOTES:

1. CONNECTION FOR CHEMICAL INJECTION.
2. SUPPLIED BY VESSEL VENDOR PROVIDED WITH BIRD SCREEN.
3. TOP OF NOZZLE 20 LOCATED 150 mm BELOW BOTTOM OF NOZZLE 11 AND AT 180°C FROM NOZZLE 12.
4. LINE TO BE SLOPED TOWARD THE STEAM TRAP.
5. STRAINER SUPPLIED WITH TRAP.
6. DELETED.
7. STEAM AND CONDENSATE LINE TO BE INSULATED ACCORDING TO 082755C-000-STD-1380-0010PART OF "GENERAL DESIGN RULES FOR PIPING" (082755C-000-JSD-1300-0002).
8. FOR PIPING CONDENSATE POT DETAILS REFER TO ASSEMBLY SHOWN ON 082755C-STD-1380-0010 PART OF GENERAL DESIGN RULES FOR PIPING (082755C-000-JSD-1300-0002).
9. TWO PHASE FLOW ANCHOR SECURELY.
10. ULTRASONIC TYPE FLOW ELEMENT (CLAMP ON TYPE).
11. SYPHON BREAKER LOCATED AT HIGH POINT.
12. SIGHT GLASS TO DETECT WATER FLOWING THROUGH OVERFLOW.
13. BL ARRANGEMENT USED FOR COMMISSIONING/PRECOMMISSIONING/START-UP PHASE.
14. KIWA MARKED NON RETURN VALVE TYPE EA.
15. TOP OF NOZZLE 11 LOCATED 150 mmm BELOW BOTTOM OF NOZZLE 12.
16. PUMP TO BE ELECTRICALLY TRACED AND INSULATED. PUMP ELECTRICAL TRACING OUT OF VENDOR SCOPE OF SUPPLY. PUMP CASING REMOVABLE THERMAL BLANKET INCLUDED IN PUMP MANUFACTURER SCOPE OF SUPPLY, SUPPLIED LOOSE. PUMP DRAIN INSULATION IN T.EN SCOPE OF SUPPLY, OUT OF VENDOR SCOPE.
17. CONTROL VALVE GROUP AND BY-PASS GROUP TO BE INSTALLED HORIZONTALLY.
18. BY-PASS ISOLATION VALVE TO BE LOCATED AT MAXIMUM 15 CM FROM POTABLE WATER MAIN LINE.
19. DRAIN VALVE TO BE USED TO EMPTY BY-PASS LINE WHEN NOT IN OPERATION.
20. FOR API PLAN ARRANGEMENT REFER TO P&ID 082755C-053-PID-0021-0075-01.

53DLF 301	SAFETY SHOWER WATER PUMP 53GA-06/S AUTOSTART
53DLF 302	EMERGENCY ELECTRIC HEATER 53EX-01 ON/OFF
53DLF 303	EMERGENCY ELECTRIC HEATER 53EX-01 OVERHEATING PROTECTION

Segment Breaks

- End of Group
- Nominal Diameter
- Piping Materials Class
- Max Design Temp. or Press.
- Heat Tracing
- Insulation Requirement
- Coating Requirement
- Supply Responsibility
- Commissioning package
- Design Responsibility
- Norm operating temp or press

CONFIDENTIAL

EQUIPMENT LIST

EXCHANGERS	PUMPS	TANK			
53EB-01	53GA-06	53FA-07			
53EX-01	53GA-06S				

REV.	DATE	DESCRIPTION	PREP	CKD	APPR
2	23/04/2024	ISSUE FOR CONSTRUCTION 3	F.G.	S.T./F.F.	C.M./M.L.
1	23/10/2023	ISSUE FOR CONSTRUCTION 2	C.A.T.	S.T./E.S.	A.C./M.L.
0	21/04/2023	ISSUE FOR CONSTRUCTION 1	C.A.T.	S.T./E.S.	A.C./M.L.
E	22/11/2022	ISSUE FOR DETAIL DESIGN	C.A.T.	S.T./E.S.	A.C./M.L.
D	11/03/2022	ISSUE FOR HAZOP	C.A.T.	S.T./E.S.	A.C./M.L.

NESTE

TEN TECHNIP ENERGIES

RDCG (Rotterdam Capacity Growth)
NESTE

UTILITIES MNA
SAFETY SHOWER AND EYE WASH SYSTEM
PIPING & INSTRUMENT DIAGRAM

TPIT Drawing No						Page	Rev.
082755C	053	PID	00	21	0003	1 of 2	2
Project	Unit	Doc. Type	Disc	Subj	Ser.No		

NESTE Drawing No				
2305		PID		
Site	Unit	Doc. Type	Drawing Code	Seq.No

This present document or drawing is property of TECHNIP ENERGIES ITALY S.p.A. and it and its contents, with any connections, be made or partially, directly or indirectly, transferred, reproduced, copied, disclosed or used, without its prior written consent, for any purpose and in any way other than that for which it is specifically furnished or available the extent of the agreed upon right of use.

53PK-02
UV STERILIZATION PACKAGE
DESIGN PRESSURE: 12 BARG
DESIGN TEMPERATURE: -25°C / +75°C

NOTE 1

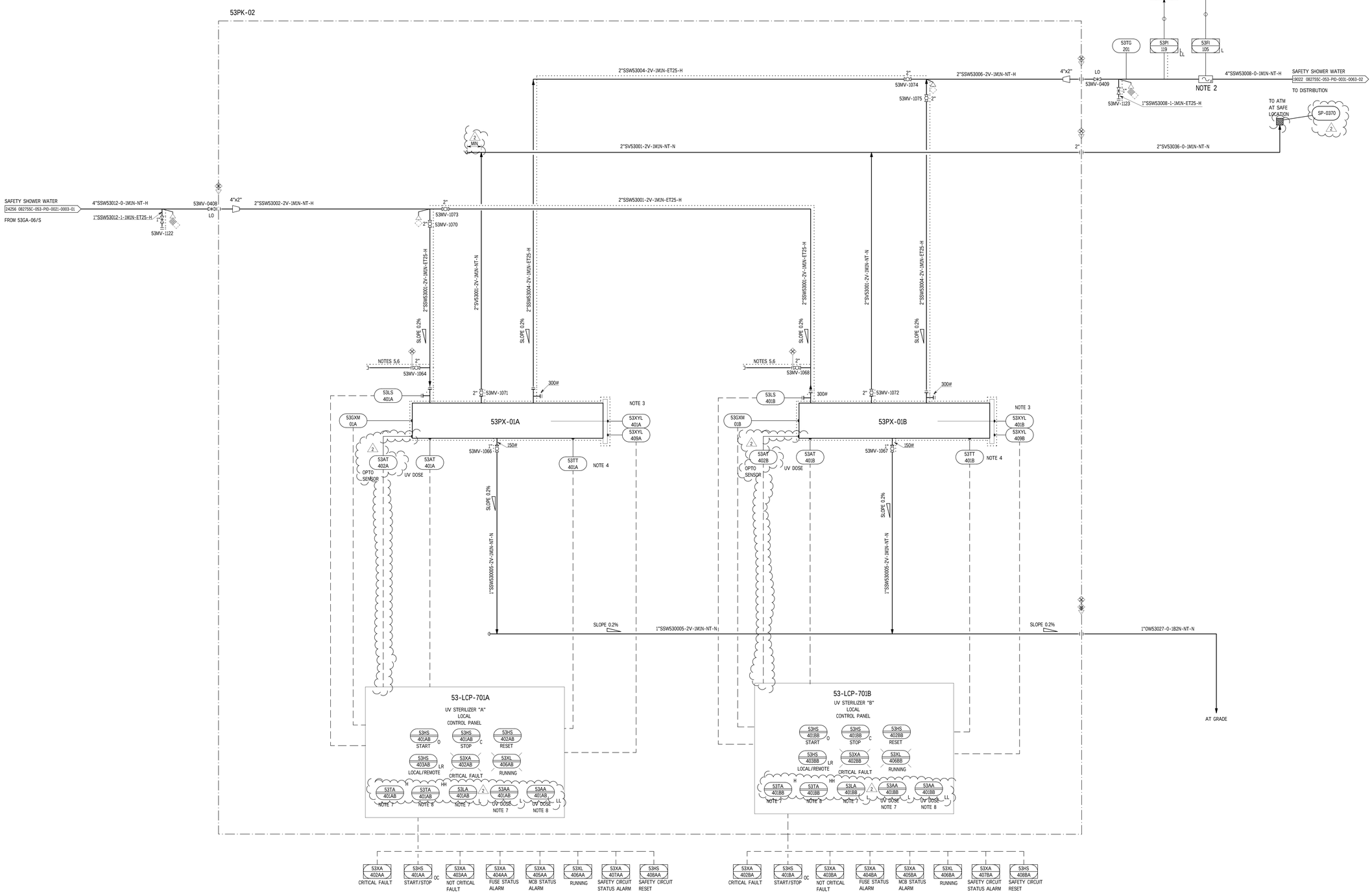

GENERAL NOTES

- FOR GENERAL NOTES AND SYMBOLS REFER TO P&ID'S 082755C-000-PID-0021-0001/0002/0003.
- ALL INSTRUMENT NOZZLES SHOWN ON EQUIPMENT ARE RATING 300# MINIMUM.
- FLANGES SHALL BE AT LEAST 300# FOR ALL PIPING DRAINS WITH SIZE LOWER THAN 2".

NOTES:

1. INSULATION AND ELECTRICAL TRACING BY T.EN.
2. ULTRASONIC TYPE FLOW ELEMENT (CLAMP ON TYPE).
3. LAMP REPLACING INTERVAL 9000 HOURS WITH MAX 3 ON/OFF CYCLE/DAY. UV LAMP HOURS GREATER THAN LIFE SET POINT OF 9000 RESULT IN NON-CRITICAL FAULT ALARM TO DCS.
4. TEMPERATURE SENSOR MEASURES OUTSIDE SURFACE TEMPERATURE. THERE IS NO PROCESS CONNECTION.
5. HOSE CONNECTION FOR NITROGEN PURGING.
6. NITROGEN CONNECTION WITH FLEXIBLE HOSE.
7. ALARM RESULTS IN A NON-CRITICAL FAULT ALARM TO DCS.
8. ALARM RESULTS IN A CRITICAL FAULT ALARM TO DCS.

53DLF 301 — SAFETY SHOWER WATER PUMP 53GA-06/S AUTOSTART

Segment Breaks
- End of Group
- Nominal Diameter
- Piping Materials Class
- Max Design Temp. or Press.
- Heat Tracing
- Insulation Requirement
- Coating Requirement
- Supply Responsibility
- Commissioning package
- Design Responsibility
- Norm operating temp or press

CONFIDENTIAL

EQUIPMENT LIST

PACKAGE
53PK-02

REV.	DATE	DESCRIPTION	PREP	CKD	APPR
2	23/04/2024	ISSUE FOR CONSTRUCTION 3	F.G.	S.T./F.F.	C.M./M.L.
1	23/11/2023	ISSUE FOR CONSTRUCTION 2	C.A.T.	S.T./E.S.	A.C./M.L.
0	04/08/2023	ISSUE FOR CONSTRUCTION 1	C.A.T.	S.T./E.S.	A.C./M.L.
A	14/06/2023	ISSUE FOR DETAIL DESIGN	M.B.	S.T./E.S.	A.C./M.L.

NESTE
T.EN TECHNIP ENERGIES

RDCG (Rotterdam Capacity Growth)
NESTE

UTILITIES MNA

UV STERILIZATION PACKAGE

PIPING & INSTRUMENT DIAGRAM

TPIT Drawing No						Page	Rev.
082755C	053	PID	00	21	0003	2 of 2	2
Project	Unit	Doc. Type	Disc	Subj	Ser.No		

NESTE Drawing No					
2305		PID			
Site	Unit	Doc. Type	Drawing Code	Seq.No	

The present document or drawing is property of TECHNIP ENERGIES ITALY S.p.A. and shall not, under any circumstances, be liable or partially, directly or indirectly, transferred, reproduced, copied, disclosed or used, without its prior written consent, for any purpose and in any way other than that for which it is specifically furnished or outside the extent of the agreed upon right of use.

53GA-03
EMERGENCY COOLING WATER PUMP
Vdes: 120 m3/h
dP: 3.9 bar

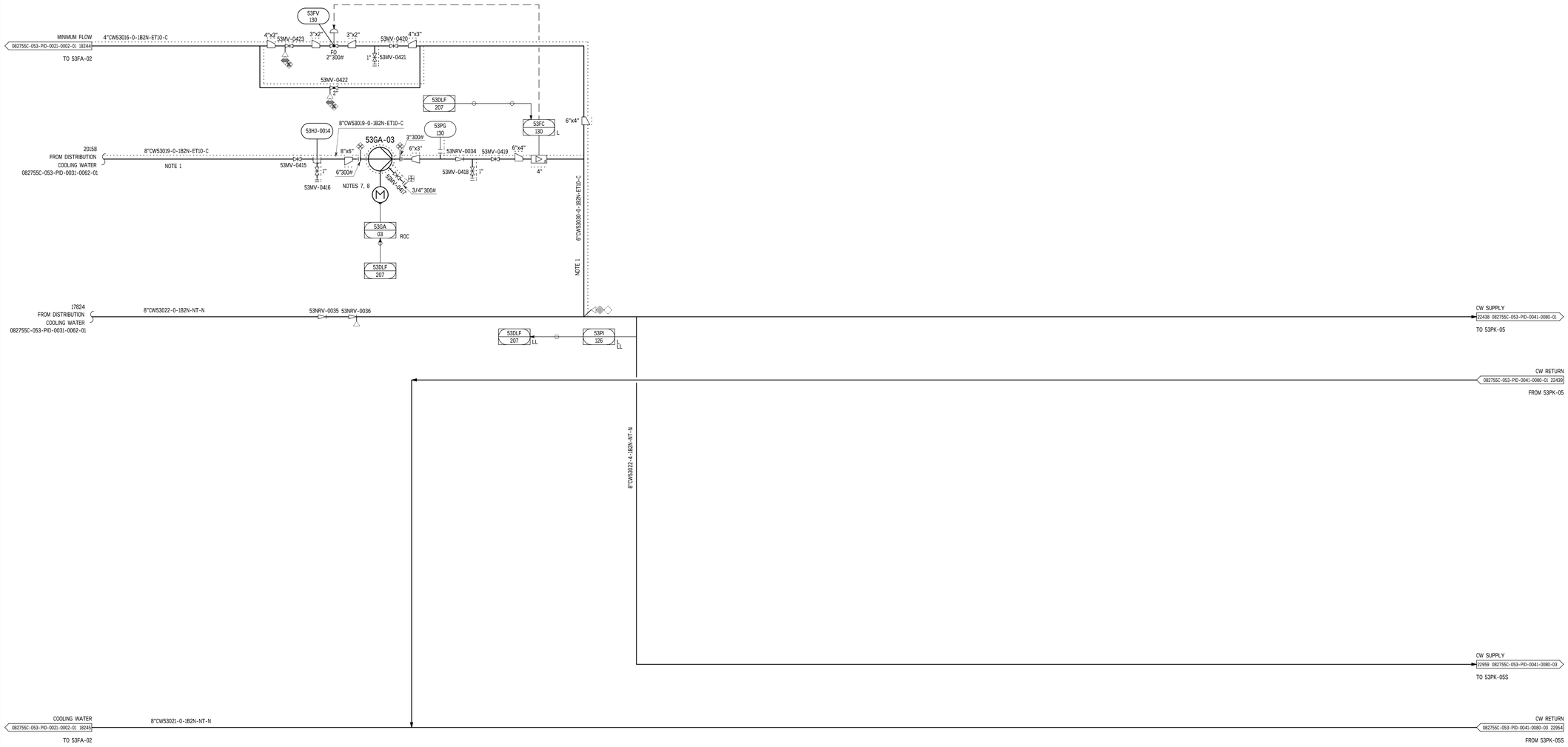

GENERAL NOTES

- FOR GENERAL NOTES AND SYMBOLS REFER TO P&ID'S 082755C-000-PID-0021-0001/0002/0003.
- ALL INSTRUMENT NOZZLES SHOWN ON EQUIPMENT ARE RATING 300# MINIMUM.
- ALL SIZES RELEVANT TO CONTROL LOOPS FLOWMETERS. RELIEF VALVES INCLUDING INLET AND OUTLET PIPES ARE PRELIMINARY.
- ALL LOCAL ELECTRONIC INDICATORS HAVE TO BE INSTALLED IN A LOCATION ACCESSIBLE BY OPERATORS (I.E. GROUND LEVEL OR NEAR PLATFORM).
- FLANGES SHALL BE AT LEAST 300# FOR ALL PIPING DRAINS WITH SIZE LOWER THAN 2".
- ALL FLANGES/JOINTS THAT ARE ENVISAGED ON THE PIPING IN HYDROCARBON/CHEMICAL SERVICE, WILL BE PROVIDED OVER THE PAVED AREA WITHIN THE PROJECT BATTERY LIMIT.

NOTES:

1. COOLING WATER LINE TO BE USED IN CASE OF POWER FAILURE OF COOLING WATER CIRCULATION PUMPS 53GA-01A/B/S.
2. DELETED.
3. DELETED.
4. DELETED.
5. DELETED.
6. DELETED.
7. FOR DETAILED ARRANGEMENT OF API PLAN REFER TO 082755C-053-PID-0021-0075-01.
8. PUMP TO BE ELECTRICALLY TRACED AND INSULATED. ELECTRICAL TRACING NOT INCLUDED IN PUMP MFR SCOPE OF SUPPLY. PUMP CASING REMOVABLE THERMAL BLANKET INCLUDED IN PUMP MANUFACTURER SCOPE OF SUPPLY, SUPPLIED LOOSE. PUMP DRAIN INSULATION IN T.EN SCOPE OF SUPPLY, OUT OF VENDOR SCOPE.

530LF / 207 — EMERGENCY COOLING WATER PUMP 53GA-03 START

Segment Breaks

- End of Group
- Nominal Diameter
- Piping Materials Class
- Max Design Temp. or Press.
- Heat Tracing
- Insulation Requirement
- Coating Requirement
- Supply Responsibility
- Commissioning package
- Design Responsibility
- Norm operating temp or press

CONFIDENTIAL

EQUIPMENT LIST

PUMPS					
53GA-03					

REV.	DATE	DESCRIPTION	PREP	CKD	APPR
2	23/04/2024	ISSUE FOR CONSTRUCTION 3	F.G.	S.T./F.F.	C.M./M.L.
1	03/10/2023	ISSUE FOR CONSTRUCTION 2	C.A.T.	S.T./E.S.	A.C./M.L.
0	21/04/2023	ISSUE FOR CONSTRUCTION 1	C.A.T.	S.T./E.S.	A.C./M.L.
E	22/11/2022	ISSUE FOR DETAIL DESIGN	C.A.T.	S.T./E.S.	A.C./M.L.
D	11/03/2022	ISSUE FOR HAZOP	C.A.T.	S.T./E.S.	A.C./M.L.

NESTE — T.EN TECHNIP ENERGIES

RDCG (Rotterdam Capacity Growth)
NESTE

UTILITIES MNA
EMERGENCY COOLING WATER PUMP
PIPING & INSTRUMENT DIAGRAM

TPIT Drawing No						Page	Rev.
082755C	053	PID	00	21	0004	1 of 3	2
Project	Unit	Doc. Type	Disc	Subj	Ser.No		

NESTE Drawing No				
2305		PID		
Site	Unit	Doc. Type	Drawing Code	Seq.No

The present document is drawing is property of TECHNIP ENERGIES ITALY S.p.A. and shall not, either by reproduction, by loading it publicly, directly or indirectly, transferred, translated, copied, disclosed or used, without its prior written consent, for any purpose and in any way other than for which it is specifically furnished or outside the scope of the agreed upon right of use.

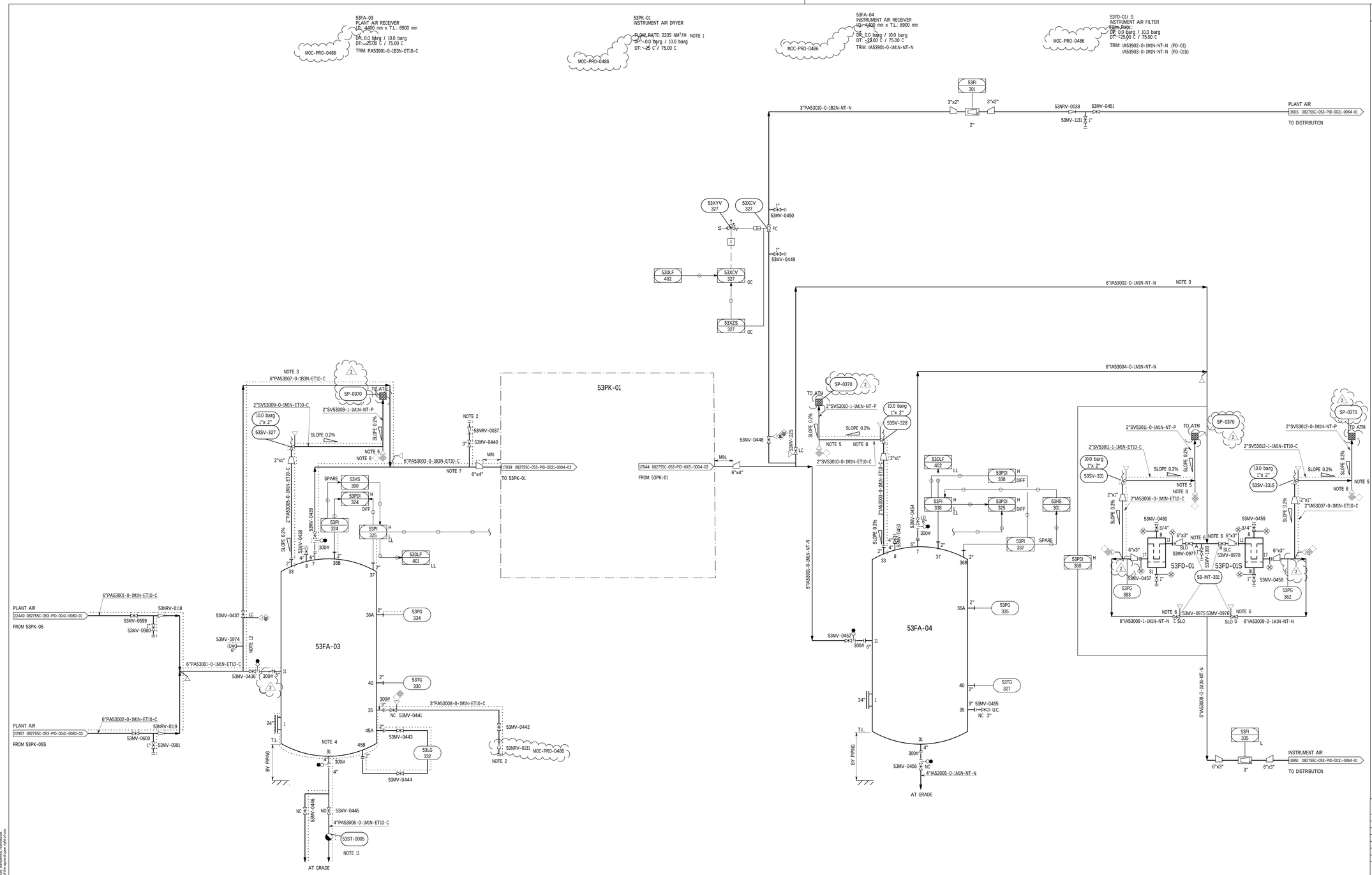

GENERAL NOTES

- FOR GENERAL NOTES AND SYMBOLS REFER TO P&ID'S 082755C-000-PID-0021-0001/0002/0003.
- ALL INSTRUMENT NOZZLES SHOWN ON EQUIPMENT ARE RATING 300# MINIMUM.
- ALL LOCAL ELECTRONIC INDICATORS HAVE TO BE INSTALLED IN A LOCATION ACCESSIBLE BY OPERATORS (I.E. GROUND LEVEL OR NEAR PLATFORM).
- FLANGES SHALL BE AT LEAST 300# FOR ALL PIPING DRAINS WITH SIZE LOWER THAN 2".
- THE RATING OF THE SAFETY VALVE INLET/OUTLET FLANGES SHALL BE THE SAME OF THE RESPECTIVE INLET/OUTLET LINES RATING UNLESS OTHERWISE SPECIFIED.
- ALL FLANGES/JOINTS THAT ARE ENVISAGED ON THE PIPING IN HYDROCARBON/CHEMICAL SERVICE, WILL BE PROVIDED OVER THE PAVED AREA WITHIN THE PROJECT BATTERY LIMIT.

NOTES:

1. NET INSTRUMENT AIR PRODUCTION.
2. CONNECTION FOR PORTABLE AIR COMPRESSOR.
3. BYPASS LINE TO BE USED ONLY DURING INSPECTION OF 53FA-03 OR 53FA-04.
4. VESSEL SHALL BE ELECTRICALLY TRACED FROM BOTTOM HEAD TO HIGH LIQUID LEVEL.
5. PROVIDE 6MM HOLE AT LOW POINT OF RELIEF VALVE. DISCHARGE LINE TO ATMPOSPHERE.
6. BLOCK VALVES ARE KEY INTERLOCKED TO ENSURE THAT AT LEAST ONE FILTER IS IN OPERATION.
7. NO POCKET.
8. OUTLET LINE TO BE TRACED "ET10-C" UP TO WEEP HOLE.
9. DELETED.
10. DELETED.
11. MOISTURE TRAP.
12. FOR COMPRESSORS COMMISSIONING AND START-UP.

530LF 401	AIR COMPRESSORS 53GB-01/S AUTOSTART
530LF 402	CLOSURE OF PLANT AIR TO DISTRIBUTION

Segment Breaks

- End of Group
- Nominal Diameter
- Piping Materials Class
- Max Design Temp. or Press.
- Heat Tracing
- Insulation Requirement
- Coating Requirement
- Supply Responsibility
- Commissioning package
- Design Responsibility
- Norm operating temp or press

CONFIDENTIAL

EQUIPMENT LIST

TANKS	PACKAGES	FILTERS			
53FA-03	53PK-01	53FD-01			
53FA-04		53FD-01S			

REV.	DATE	DESCRIPTION	PREP	CKD	APPR
2	23/04/2024	ISSUE FOR CONSTRUCTION 3	F.G.	S.T./F.F.	C.M./M.L.
1	03/10/2023	ISSUE FOR CONSTRUCTION 2	C.A.T.	S.T./E.S.	A.C./M.L.
0	21/04/2023	ISSUE FOR CONSTRUCTION 1	C.A.T.	S.T./E.S.	A.C./M.L.
E	22/11/2022	ISSUE FOR DETAIL DESIGN	C.A.T.	S.T./E.S.	A.C./M.L.
D	11/03/2022	ISSUE FOR HAZOP	C.A.T.	S.T./E.S.	A.C./M.L.

NESTE

TECHNIP ENERGIES

RDCG (Rotterdam Capacity Growth)
NESTE

UTILITIES MNA

PLANT AIR AND INSTRUMENT AIR SYSTEM
PIPING & INSTRUMENT DIAGRAM

TPIT Drawing No						Page	Rev.
082755C	053	PID	00	21	0004	2 of 3	2
Project	Unit	Doc. Type	Disc	Subj	Ser.No		

NESTE Drawing No					
2305		PID			
Site	Unit	Doc. Type	Drawing Code		Seq.No

This present document or drawing is property of TECHNIP ENERGIES ITALY S.p.A. and (where) under no circumstances, be totally or partially, directly or indirectly, transferred, translated, copied, disclosed or used, without its prior written consent, for any purpose and in any way other than that for which it is specifically furnished or outside the extent of the agreed upon right of use.

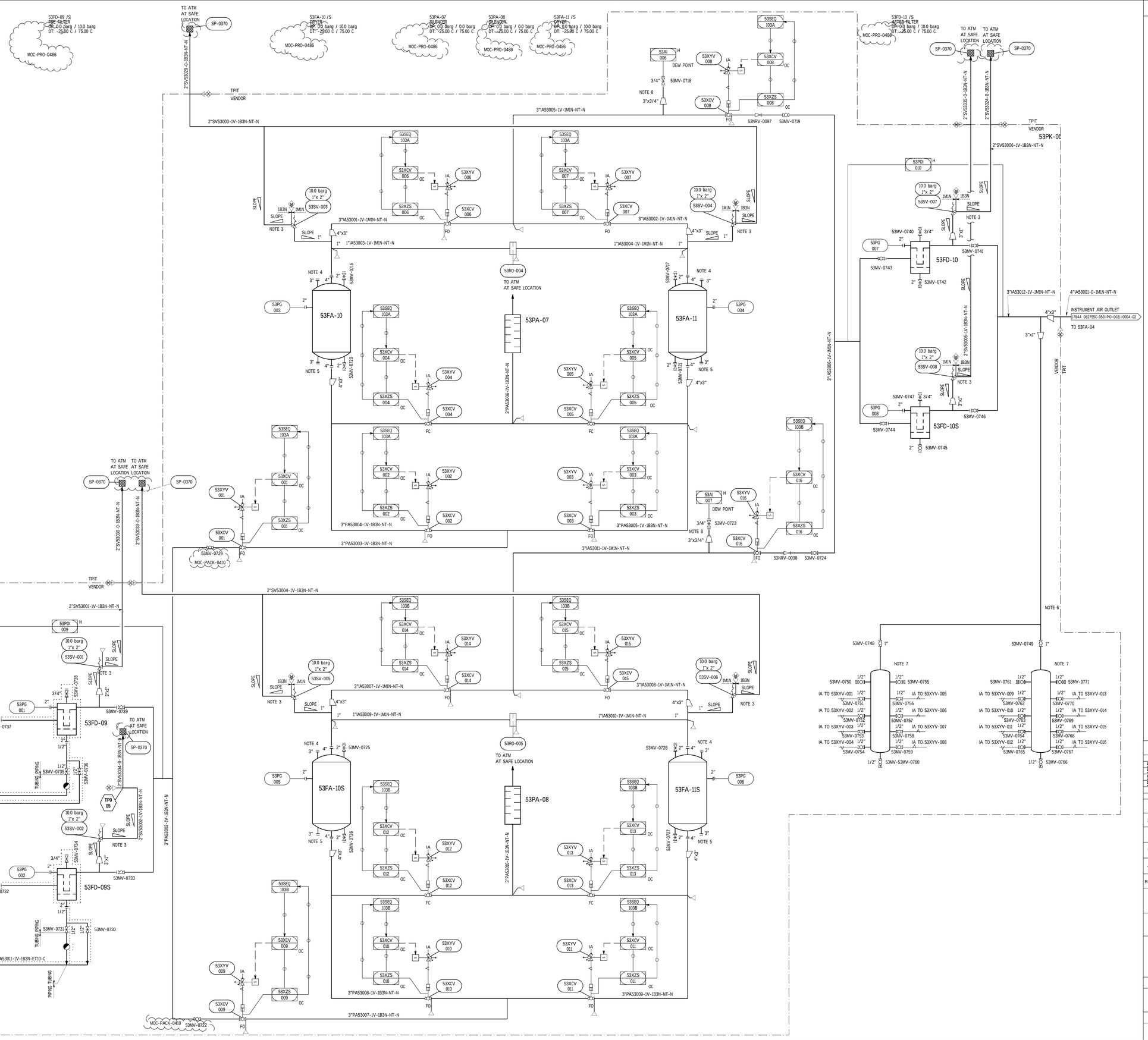

GENERAL NOTES

- FOR GENERAL NOTES AND SYMBOLS REFER TO P&ID'S 082755C-000-PID-0021-0001/0002/0003.

NOTES:

1. DELETED.
2. DELETED.
3. 6MM HOLE AT LOW POINT OF RELIEF VALVE. OUTLET LINE.
4. DESICCANT MATERIAL LOAD NOZZLE.
5. DESICCANT MATERIAL UNLOAD NOZZLE.
6. THE PACKAGE IS DESIGNED FOR BLACK START. NO EXTERNAL SOURCE OF PLANT/INSTRUMENT AIR FOR START-UP IS REQUIRED.
7. INSTRUMENT AIR MANIFOLDS AS PER JSD-1540-0001 MODULARITIES ARE: 4-10-20 USERS.
8. ANALYZER SAMPLING NOZZLE AS PER STD-139C IS DETAILED IN A3006.

53SEQ 103A — DRYER 53FA-10/11 CYCLIC SEQUENCE

53SEQ 103B — DRYER 53FA-10S/11S CYCLIC SEQUENCE

Segment Breaks

- End of Group
- Nominal Diameter
- Piping Materials Class
- Max Design Temp. or Press.
- Heat Tracing
- Insulation Requirement
- Coating Requirement
- Supply Responsibility
- Commissioning package
- Design Responsibility
- Norm operating temp or press

CONFIDENTIAL

EQUIPMENT LIST

DRYER	FILTER	SILENCER			
53FA-10	53FD-09	53PA-07			
53FA-10S	53FD-09S	53PA-08			
53FA-11	53FD-10				
53FA-11S	53FD-10S				

REV.	DATE	DESCRIPTION	PREP	CKD	APPR
2	23/04/2024	ISSUE FOR CONSTRUCTION 3	F.G.	S.T./F.F.	C.M./M.L.
1	03/10/2023	ISSUE FOR CONSTRUCTION 2	C.A.T.	S.T./E.S.	A.C./M.L.
0	31/05/2023	ISSUE FOR CONSTRUCTION 1	C.A.T.	S.T./E.S.	A.C./M.L.
A	03/02/2023	ISSUE FOR DETAIL DESIGN	C.A.T.	S.T./E.S.	A.C./M.L.

NESTE

TECHNIP ENERGIES

RDCG (Rotterdam Capacity Growth)
NESTE

UTILITIES MNA

AIR DRYER 53PK-01

PIPING & INSTRUMENT DIAGRAM

TPIT Drawing No						Page	Rev.
082755C	053	PID	00	21	0004	3 of 3	2
Project	Unit	Doc. Type	Disc	Subj	Ser.No		

NESTE Drawing No				
2305		PID		
Site	Unit	Doc. Type	Drawing Code	Seq.No

This present document is Technip property of TECHNIP ENERGIES ITALY S.p.A. and contains, under any circumstances, no liability or partially, directly or indirectly, transferred, reproduced, copied, disclosed or used, without its prior written consent, for any purpose and in any way other than that for which it is specifically furnished or outside the scope of the agreed upon right of use.

OH2 PUMP API PLAN 23+61

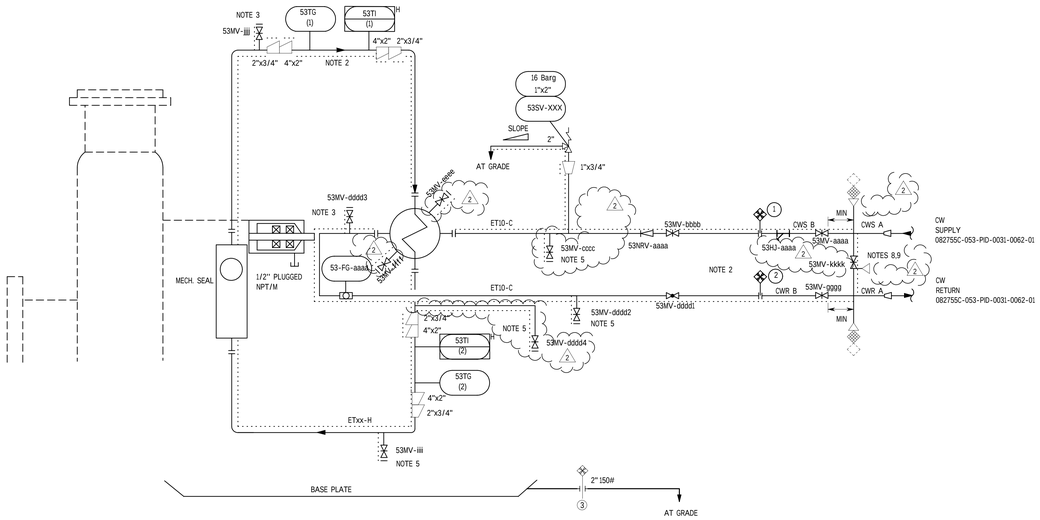

EQUIPMENT TAG	PID NUMBER	COOLING WATER					OW DRAIN LINE NUMBER	CONN 1 (CWS)	CONN 2 (CWR)	CONN 3 (OW)	TG (1)	TG (2)	TI (1)	TI (2)	SV	API PLAN COOLER	ELECTRICAL TRACING TEMPERATURE	SIGHT GLASS
		SUPPLY LINE NUMBER (CWS A)	RETURN LINE NUMBER (CWR A)	PID NUMBER	SUPPLY LINE NUMBER (CWS B)	RETURN LINE NUMBER (CWR B)												
53GA-04	082755C-053-PID-0021-0001-03	1-1/2"CW53043-0-1B2N-NT-N	1-1/2"CW53049-0-1B2N-NT-N	082755C-053-PID-0031-0062-01	1-1/2"CW53056-0-1B2N-ET10-C	1-1/2"CW53062-0-1B2N-ET10-C	2"OW53013-0-1B2N-NT-N	3/4"-150#	3/4"-150#	2"-150#	53TG221	53TG209	53TI220	53TI222	53SV-201	53EA-07	10° C	53-FG-9100
53GA-04S	082755C-053-PID-0021-0001-03	1-1/2"CW53044-0-1B2N-NT-N	1-1/2"CW53050-0-1B2N-NT-N	082755C-053-PID-0031-0062-01	1-1/2"CW53057-0-1B2N-ET10-C	1-1/2"CW53063-0-1B2N-ET10-C	2"OW53014-0-1B2N-NT-N	3/4"-150#	3/4"-150#	2"-150#	53TG221S	53TG209S	53TI220S	53TI222S	53SV-201S	53EA-07S	10° C	53-FG-9101
53GA-05	082755C-053-PID-0021-0001-03	1-1/2"CW53045-0-1B2N-NT-N	1-1/2"CW53051-0-1B2N-NT-N	082755C-053-PID-0031-0062-01	1-1/2"CW53058-0-1B2N-ET10-C	1-1/2"CW53064-0-1B2N-ET10-C	2"OW53015-0-1B2N-NT-N	3/4"-150#	3/4"-150#	2"-150#	53TG215	53TG210	53TI214	53TI212	53SV-202	53EA-08	10° C	53-FG-9102
53GA-05S	082755C-053-PID-0021-0001-03	1-1/2"CW53046-0-1B2N-NT-N	1-1/2"CW53052-0-1B2N-NT-N	082755C-053-PID-0031-0062-01	1-1/2"CW53059-0-1B2N-ET10-C	1-1/2"CW53065-0-1B2N-ET10-C	2"OW53016-0-1B2N-NT-N	3/4"-150#	3/4"-150#	2"-150#	53TG215S	53TG210S	53TI214S	53TI212S	53SV-202S	53EA-08S	10° C	53-FG-9103
53GA-07	082755C-053-PID-0021-0001-02	1-1/2"CW53047-0-1B2N-NT-N	1-1/2"CW53053-0-1B2N-NT-N	082755C-021-PID-0031-0062-02	1-1/2"CW53060-0-1B2N-ET10-C	1-1/2"CW53066-0-1B2N-ET10-C	2"OW53017-0-1B2N-NT-N	3/4"-150#	3/4"-150#	2"-150#	53TG224	53TG211	53TI223	53TI225	53SV-203	53EA-09	10° C	53-FG-9104
53GA-07S	082755C-053-PID-0021-0001-02	1-1/2"CW53048-0-1B2N-NT-N	1-1/2"CW53054-0-1B2N-NT-N	082755C-021-PID-0031-0062-02	1-1/2"CW53061-0-1B2N-ET10-C	1-1/2"CW53067-0-1B2N-ET10-C	2"OW53018-0-1B2N-NT-N	3/4"-150#	3/4"-150#	2"-150#	53TG224S	53TG211S	53TI223S	53TI225S	53SV-203S	53EA-09S	10° C	53-FG-9105

ITEM PUMP		MANUAL VALVE													CHECK VALVE	Y-STRAINER
	53MV-aaaa	53MV-bbbb	53MV-cccc	53MV-dddd1	53MV-dddd2	53MV-dddd3	53MV-dddd4	53MV-eeee	53MV-ffff	53MV-gggg	53MV-iiii	53MV-jjjj	53MV-kkkk		53NRV-aaaa	53HJ-aaaa
53GA-04	53MV-0878	53MV-0884	53MV-0890	53MV-0896	53MV-0902	53MV-0908	53MV-1168	53MV-0914	53MV-0920	53MV-1077	53MV-0926	53MV-0932	53MV-1083		53NRV-0111	53HJ-0101
53GA-04S	53MV-0879	53MV-0885	53MV-0891	53MV-0897	53MV-0903	53MV-0909	53MV-1169	53MV-0915	53MV-0921	53MV-1078	53MV-0927	53MV-0933	53MV-1084		53NRV-0112	53HJ-0102
53GA-05	53MV-0880	53MV-0886	53MV-0892	53MV-0898	53MV-0904	53MV-0910	53MV-1170	53MV-0916	53MV-0922	53MV-1079	53MV-0928	53MV-0934	53MV-1085		53NRV-0113	53HJ-0103
53GA-05S	53MV-0881	53MV-0887	53MV-0893	53MV-0899	53MV-0905	53MV-0911	53MV-1171	53MV-0917	53MV-0923	53MV-1080	53MV-0929	53MV-0935	53MV-1086		53NRV-0114	53HJ-0104
53GA-07	53MV-0882	53MV-0888	53MV-0894	53MV-0900	53MV-0906	53MV-0912	53MV-1172	53MV-0918	53MV-0924	53MV-1081	53MV-0930	53MV-0936	53MV-1087		53NRV-0115	53HJ-0105
53GA-07S	53MV-0883	53MV-0889	53MV-0895	53MV-0901	53MV-0907	53MV-0913	53MV-1173	53MV-0919	53MV-0925	53MV-1082	53MV-0931	53MV-0937	53MV-1088		53NRV-0116	53HJ-0106

OH1/OH2 PUMP API PLAN 11+61

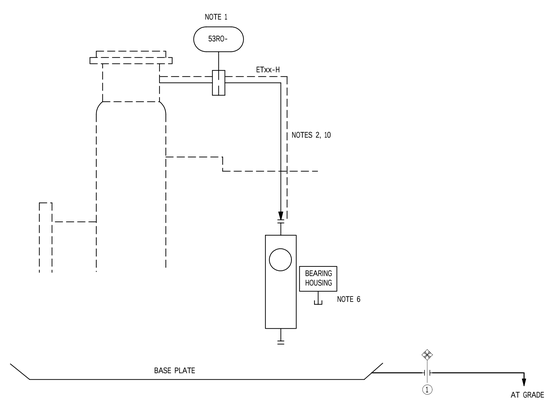

EQUIPMENT TAG	PID NUMBER	OW DRAIN LINE NUMBER	CONN 1 (OW)	RO TAG	ELECTRICAL TRACING TEMPERATURE
53GA-02	082755C-053-PID-0021-0002-03	2"OW53019-0-1B2N-NT-N	2"-150#	53RO-003	10° C
53GA-02S	082755C-053-PID-0021-0002-03	2"OW53020-0-1B2N-NT-N	2"-150#	53RO-003S	10° C
53GA-03	082755C-053-PID-0021-0004-01	2"OW53021-0-1B2N-NT-N	2"-150#	53RO-201	10° C
53GA-06	082755C-053-PID-0021-0003-01	2"OW53022-0-1B2N-NT-N	1"-150#	53RO-202	25° C
53GA-06S	082755C-053-PID-0021-0003-01	2"OW53023-0-1B2N-NT-N	1"-150#	53RO-202S	25° C

BB PUMP API PLAN 11+61

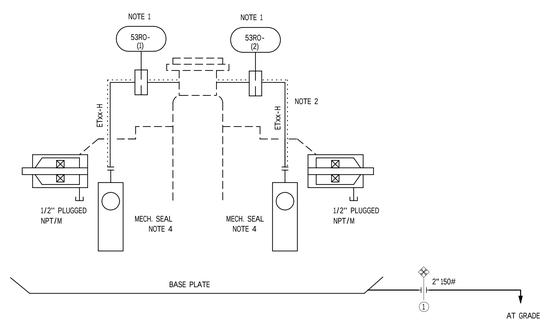

EQUIPMENT TAG	PID NUMBER	OW DRAIN LINE NUMBER	CONN 1 (OW)	RO TAG (1)	RO TAG (2)	ELECTRICAL TRACING TEMPERATURE
53GA-01A	082755C-053-PID-0021-0002-01	2"OW53024-0-1B2N-NT-N	2"-150#	53RO-002A	53RO-001A	10° C
53GA-01B	082755C-053-PID-0021-0002-01	2"OW53025-0-1B2N-NT-N	2"-150#	53RO-002B	53RO-001B	10° C
53GA-01S	082755C-053-PID-0021-0002-01	2"OW53026-0-1B2N-NT-N	2"-150#	53RO-002S	53RO-001S	10° C

GENERAL NOTES

- FOR GENERAL NOTES AND SYMBOLS REFER TO P&ID'S 082755C-000-PID-0021-0001/0002/0003.
- ALL INSTRUMENT NOZZLES SHOWN ON THE EQUIPMENT ARE RATING 300# MINIMUM.
- ALL LOCAL ELECTRONIC INDICATORS HAVE TO BE INSTALLED IN A LOCATION ACCESSIBLE BY OPERATORS (I.E. GROUND LEVEL OR NEAR PLATFORM).
- THE RATING OF THE SAFETY VALVE INLET/OUTLET FLANGES SHALL BE THE SAME OF THE RESPECTIVE SAFETY VALVE INLET OUTLET LINES RATING UNLESS OTHERWISE SPECIFIED.

NOTES:

1. INCLUDE IN VENDOR SCOPE.
2. THERMAL INSULATION AND ELECTRICAL TRACING OUT OF VENDOR SCOPE, TEN SCOPE OF WORK.
3. VENT WITH VALVE AND BLIND AT HIGH POINT.
4. MECHANICAL SEAL WITH TAPPED HOLES FOR POSSIBLE QUENCH.
5. DRAIN WITH VALVE AND BLIND AT LOW POINT.
6. PLUGGED 1/2" NPT/M FOR 53GA-02/S AND 53GA-03.
7. DELETED.
8. 3MM HOLE ON VALVE DISC.
9. DELETED.
10. API PLAN 11 LINE MADE OF TUBING FOR ITEM 53GA-06/S.

Segment Breaks
- End of Group
- Nominal Diameter
- Piping Materials Class
- Max Design Temp. or Press.
- Heat Tracing
- Insulation Requirement
- Coating Requirement
- Supply Responsibility
- Commissioning package
- Design Responsibility
- Norm operating temp or press

CONFIDENTIAL

EQUIPMENT LIST

REV.	DATE	DESCRIPTION	PREP	CKD	APPR
2	23/04/2024	ISSUE FOR CONSTRUCTION 3	F.G.	S.T./F.F.	C.M./M.L.
1	03/10/2023	ISSUE FOR CONSTRUCTION 2	C.A.T.	S.T./E.S.	A.C./M.L.
0	12/06/2023	ISSUE FOR CONSTRUCTION 1	C.A.T.	S.T./E.S.	A.C./M.L.
A	09/03/2023	ISSUE FOR DETAIL DESIGN	C.A.T.	S.T./E.S.	A.C./M.L.

NESTE

TECHNIP ENERGIES

RDCG (Rotterdam Capacity Growth)
NESTE

UTILITIES MNA

API PLAN

PIPING & INSTRUMENT DIAGRAM

TPIT Drawing No						Page	Rev.
082755C	053	PID	00	21	0075	1 of 2	2
Project	Unit	Doc. Type	Disc	Subj	Ser.No		

NESTE Drawing No				
2305		PID		
Site	Unit	Doc. Type	Drawing Code	Seq.No

The present document or drawing is property of TECHNIP ENERGIES ITALY S.p.A. and shall not, under any circumstances, be lodged, or partially, directly or indirectly, published, reproduced, copied, disclosed or used, without the prior written consent, for any purpose and in any way other than that for which it is specifically furnished or outside the scope of the signed upon right of use.

S-TYPE 1S

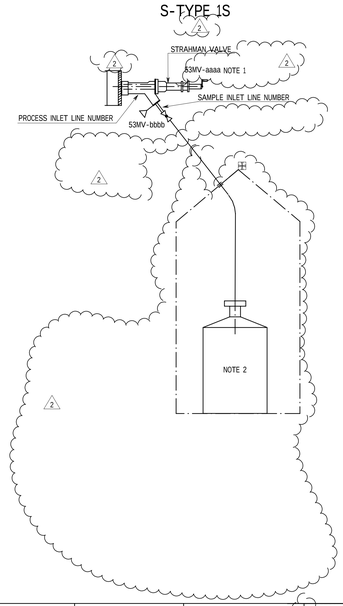

SAMPLING	P&ID NUMBER	SERVICE	PROCESS INLET LINE NUMBER	SAMPLE INLET LINE NUMBER	STRAHMAN VALVE 53MV-aaaa	MANUAL VALVE 53MV-bbbb
S-53101-1S	082755C-053-PID-0021-0002-01	COOLING WATER FROM 53GA-01 A/B/S	3/4"CW53032-0-1B2N-ET10-C	1/2"CW53032-0-1B2N-ET10-C	53MV-0856	53MV-0857

SC-TYPE 5S

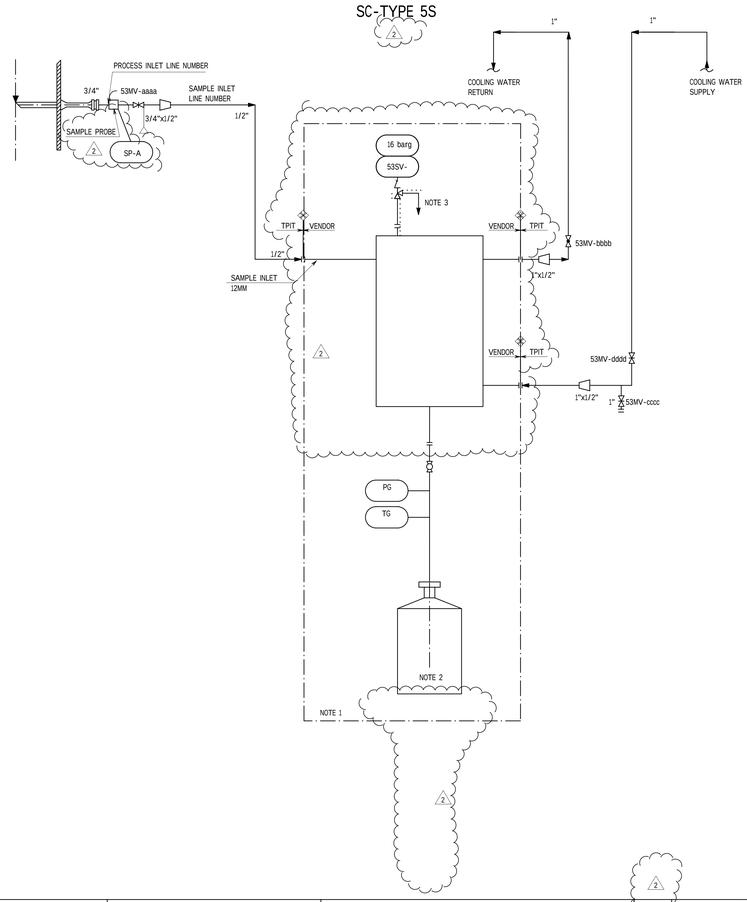

SAMPLING	P&ID NUMBER	SERVICE	INLET LINE NUMBER PROCESS	INLET LINE NUMBER SAMPLE	COOLING WATER SUPPLY	COOLING WATER RETURN	P&ID NUMBER	SP-A	MANUAL VALVE 53MV-aaaa	MANUAL VALVE 53MV-bbbb	MANUAL VALVE 53MV-cccc	MANUAL VALVE 53MV-dddd	PG	TG	SV
SC-53301-5S	082755C-053-PID-0021-0001-01	CONDENSATE FROM 53BG-01	3/4"CS3038-0-1B2NB-ET10-H	3/4"CS3038-9-1B2NB-ET10-H	1"CW53037-0-1B2N-ET10-C	1"CW53039-0-1B2N-ET10-C	082755C-053-PID-0031-0062-01	SP-700	53MV-0861	53MV-0863	53MV-0865	53MV-0874	53PGI52	53TGI43	53SV-114
SC-53302-5S	082755C-053-PID-0021-0001-02	CONDENSATE FROM 53GA-07/S	3/4"CS3015-0-1B2NB-ET10-H	3/4"CS3015-9-1B2NB-ET10-H	1"CW53038-0-1B2N-ET10-C	1"CW53040-0-1B2N-ET10-C	082755C-021-PID-0031-0062-02	SP-700	53MV-0862	53MV-0864	53MV-0866	53MV-0875	53PGI53	53TGI44	53SV-116
SC-53201-5S	082755C-053-PID-0021-0001-03	CONDENSATE FROM 53GA-04/S	3/4"CS3004-0-1B2NB-ET10-H	3/4"CS3004-9-1B2NB-ET10-H	1"CW53041-0-1B2N-ET10-C	1"CW53042-0-1B2N-ET10-C	082755C-053-PID-0031-0062-03	SP-700	53MV-0867	53MV-0873	53MV-0869	53MV-0876	53PGI54	53TGI54	53SV-115

GENERAL NOTES

- FOR GENERAL NOTES AND SYMBOLS REFER TO P&ID'S 082755C-000-PID-0021-0001/0002/0003.
- ALL LOCAL ELECTRONIC INDICATORS HAVE TO BE INSTALLED IN A LOCATION ACCESSIBLE BY OPERATORS (I.E. GROUND LEVEL OR NEAR PLATFORM).
- FLANGES SHALL BE AT LEAST RATING 300# FOR ALL THE PIPING DRAINS WITH SIZE LOWER THAN 2".
- THE RATING OF SAFETY VALVE INLET/OUTLET FLANGES SHALL BE THE SAME OF THE RESPECTIVE SAFETY VALVE INLET/OUT LINES RATING UNLESS OTHERWISE SPECIFIED.
- ALL FLANGES/JOINTS THAT ARE ENVISAGED ON THE PIPING IN HYDROCARBON/CHEMICAL SERVICE, WILL BE PROVIDED OVER THE PAVED AREA WITHIN THE PROJECT BATTERY LIMIT.

NOTES:

1. FOR DETAILS SEE DOCUMENT 082755C-000-NM-1350-0005 SPECIAL ITEM LIST.
2. SAMPLING BOTTLE/CONTAINER PURCHASED BY CLIENT.
3. OUTLET LINE TO BE TRACED "ET10-C" AT LEAST 1M FROM SV OUTLET END TO BE SLOPED.
4. DELETED.
5. DELETED.
6. DELETED.

Segment Breaks

- End of Group
- Nominal Diameter
- Piping Materials Class
- Max Design Temp. or Press.
- Heat Tracing
- Insulation Requirement
- Coating Requirement
- Supply Responsibility
- Commissioning package
- Design Responsibility
- Norm operating temp or press

CONFIDENTIAL

EQUIPMENT LIST

REV.	DATE	DESCRIPTION	PREP	CKD	APPR
2	18/09/2024	ISSUE FOR CONSTRUCTION 3	R.M.U.	S.T./F.F.	C.M./M.L.
1	06/11/2023	ISSUE FOR CONSTRUCTION 2	C.A.T.	S.T./E.S.	A.C./M.L.
0	28/05/2023	ISSUE FOR CONSTRUCTION 1	C.A.T.	S.T./E.S.	A.C./M.L.
A	22/02/2023	ISSUE FOR DETAIL DESIGN	C.A.T.	S.T./E.S.	A.C./M.L.

NESTE

TECHNIP ENERGIES

RDCG (Rotterdam Capacity Growth)
NESTE

UTILITIES MNA
SAMPLE DETAILS S-TYPE 1S, AND SC-TYPE 5S
PIPING & INSTRUMENT DIAGRAM

TPIT Drawing No						Page	Rev.
082755C	053	PID	00	21	0075	2 of 2	2
Project	Unit	Doc. Type	Disc	Subj	Ser.No		

NESTE Drawing No				
2305		PID		
Site	Unit	Doc. Type	Drawing Code	Seq.No

The present document as drawing is property of TECHNIP INDIRECT ITALY S.p.A. and shall not be, under any circumstances, be made or partially, directly or indirectly, transferred, transferred, copied, disclosed or used, without its prior written consent, for any purpose and in any other form that for which it is specifically licensed or outside the scope of the agreed upon right of use.

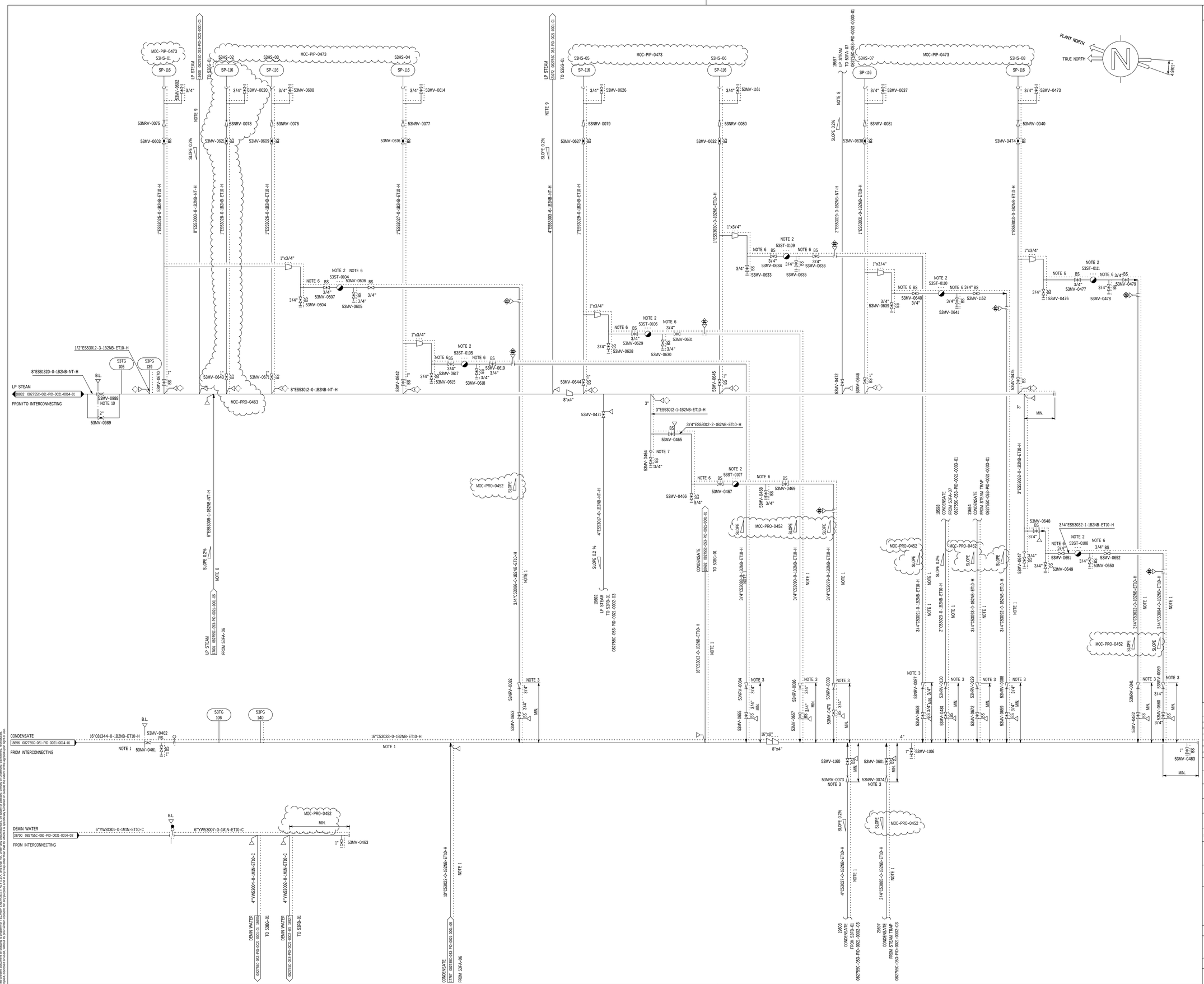

GENERAL NOTES

- FOR GENERAL NOTES AND SYMBOLS REFER TO P&ID'S 082755C-000-PID-0021-0001/0002/0003.
- ALL INSTRUMENT NOZZLES SHOWN ON EQUIPMENT ARE RATING 300# MINIMUM.
- ALL LOCAL ELECTRONIC INDICATORS HAVE TO BE INSTALLED IN A LOCATION ACCESSIBLE BY OPERATORS (I.E. GROUND LEVEL OR NEAR PLATFORM).
- FLANGES SHALL BE AT LEAST 300# FOR ALL PIPING DRAINS WITH SIZE LOWER THAN 2".
- THE RATING OF THE SAFETY VALVE INLET/OUTLET FLANGES SHALL BE THE SAME OF THE RESPECTIVE INLET/OUTLET LINES RATING UNLESS OTHERWISE SPECIFIED.
- ALL FLANGES/JOINTS THAT ARE ENVISAGED ON THE PIPING IN HYDROCARBON/CHEMICAL SERVICE, WILL BE PROVIDED OVER THE PAVED AREA WITHIN THE PROJECT BATTERY LIMIT.

NOTES:

1. TWO PHASE FLOW. POSSIBLE SLUG FLOW.
2. STEAM TRAP SUPPLIED WITH STRAINER.
3. CHECK VALVE TO BE LOCATED AT HIGHEST POINT AS CLOSE AS POSSIBLE TO CONDENSATE RETURN HEADER.
4. DELETED.
5. DELETED.
6. STEAM AND CONDENSATE LINES TO BE INSULATED TOGETHER.
7. FOR PIPING CONDENSATE POT DETAILS REFER TO ASSEMBLY SHOWN ON 082755C-000-STD-1380-0010 OF "GENERAL DESIGN RULES FOR PIPING" (082755C-000-JSD-1300-0002).
8. LINE TO BE SLOPED TOWARD THE STEAM TRAP.
9. LINE TO BE SLOPED TOWARD THE HEADER.
10. BL ARRANGEMENT USED FOR COMMISSIONING/PRECOMMISSIONING/START-UP PHASE.
11. DELETED.

Segment Breaks

- End of Group
- Nominal Diameter
- Piping Materials Class
- Max Design Temp. or Press.
- Heat Tracing
- Insulation Requirement
- Coating Requirement
- Supply Responsibility
- Commissioning package
- Design Responsibility
- Norm operating temp or press

CONFIDENTIAL

EQUIPMENT LIST

REV.	DATE	DESCRIPTION	PREP	CKD	APPR
2	23/04/2024	ISSUE FOR CONSTRUCTION 3	F.G.	S.T./F.F.	C.M./M.L.
1	03/10/2023	ISSUE FOR CONSTRUCTION 2	C.A.T.	S.T./E.S.	A.C./M.L.
0	21/04/2023	ISSUE FOR CONSTRUCTION 1	C.A.T.	S.T./E.S.	A.C./M.L.
E	22/11/2022	ISSUE FOR DETAIL DESIGN	C.A.T.	S.T./E.S.	A.C./M.L.
D	11/03/2022	ISSUE FOR HAZOP	C.A.T.	S.T./E.S.	A.C./M.L.

NESTE

TECHNIP ENERGIES

RDCG (Rotterdam Capacity Growth)
NESTE

UTILITIES MNA

STEAM CONDENSATE AND DEMI WATER DISTR.
PIPING & INSTRUMENT DIAGRAM

TPIT Drawing No						Page	Rev.
082755C	053	PID	00	31	0061	1of 2	2
Project	Unit	Doc. Type	Disc	Subj	Ser.No		

NESTE Drawing No				
2305		PID		
Site	Unit	Doc. Type	Drawing Code	Seq.No

The present document or drawing is property of TECHNIP ENERGIES ITALY S.p.A. and shall not, under any circumstances, be lodged, or partially, directly or indirectly, transmitted, reproduced, copied, disclosed or used, without its prior written consent, for any purpose and in any way other than for which it is specifically forwarded or outside the extent of the agreed upon right of use.

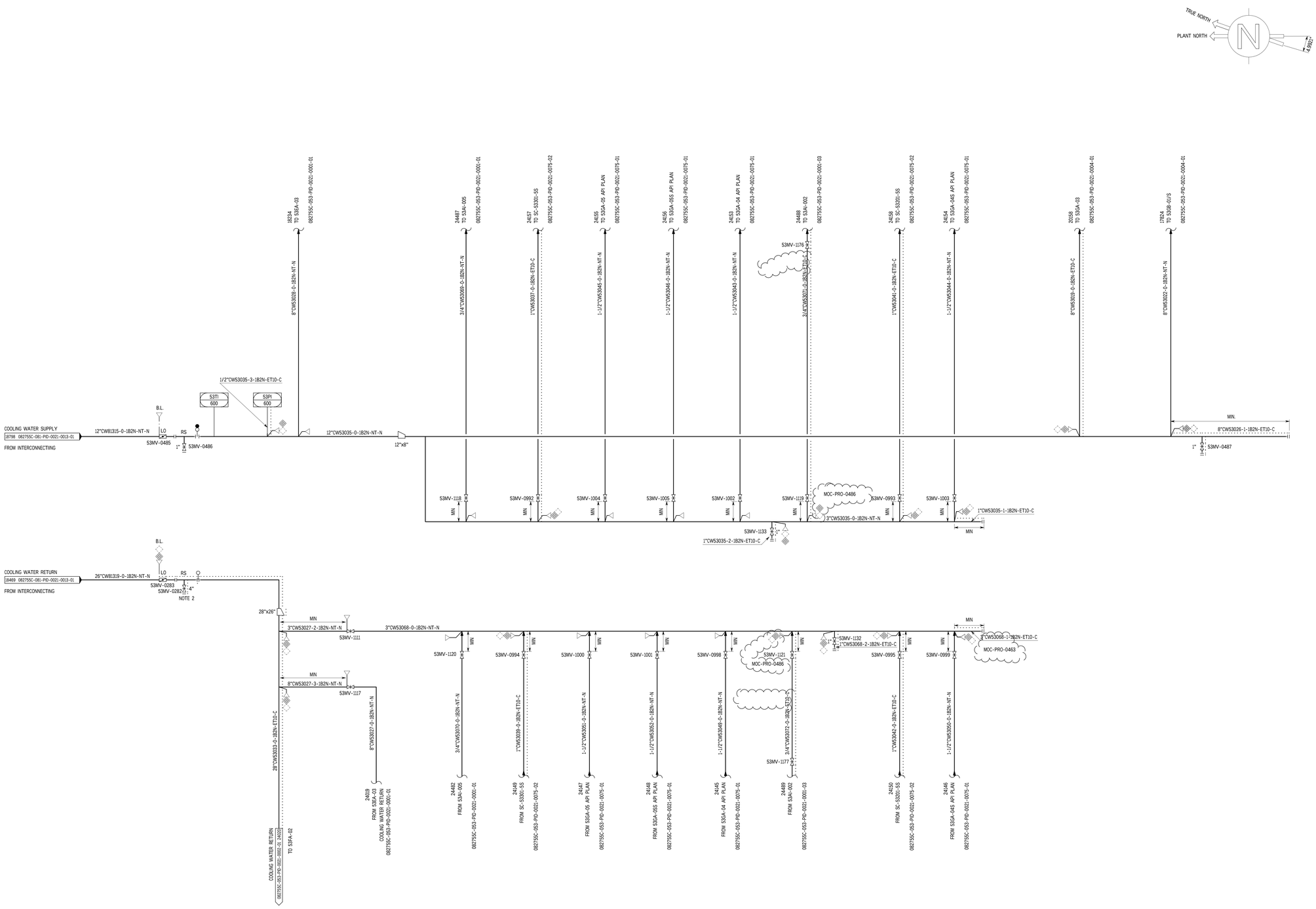

GENERAL NOTES

- FOR GENERAL NOTES AND SYMBOLS REFER TO P&ID'S 082755C-000-PID-0021-0001/0002/0003.
- ALL INSTRUMENT NOZZLES SHOWN ON EQUIPMENT ARE RATING 300# MINIMUM.
- ALL LOCAL ELECTRONIC INDICATORS HAVE TO BE INSTALLED IN A LOCATION ACCESSIBLE BY OPERATORS (I.E. GROUND LEVEL OR NEAR PLATFORM).
- FLANGES SHALL BE AT LEAST RATING 300# FOR ALL THE PIPING DRAINS WITH SIZE LOWER THAN 2".
- THE RATING OF THE SAFETY VALVE INLET/OUTLET FLANGES SHALL BE THE SAME OF THE RESPECTIVE INLET/OUTLET LINES RATING UNLESS OTHERWISE SPECIFIED.
- ALL FLANGES/JOINTS THAT ARE ENVISAGED ON THE PIPING IN HYDROCARBON/CHEMICAL SERVICE, WILL BE PROVIDED OVER THE PAVED AREA WITHIN THE PROJECT BATTERY LIMIT.

NOTES:

1 DELETED.

2. TO BE USED ALSO FOR PRECOMMISSIONING ACTIVITIES.

Segment Breaks

- End of Group
- Nominal Diameter
- Piping Materials Class
- Max Design Temp. or Press.
- Heat Tracing
- Insulation Requirement
- Coating Requirement
- Supply Responsibility
- Commissioning package
- Design Responsibility
- Norm operating temp or press

CONFIDENTIAL

EQUIPMENT LIST

REV.	DATE	DESCRIPTION	PREP	CKD	APPR
2	23/04/2024	ISSUE FOR CONSTRUCTION 3	F.G.	S.T./F.F.	C.M./M.L.
1	03/10/2023	ISSUE FOR CONSTRUCTION 2	C.A.T.	S.T./E.S.	A.C./M.L.
0	16/05/2023	ISSUE FOR CONSTRUCTION 1	C.A.T.	S.T./E.S.	A.C./M.L.
E	22/11/2022	ISSUE FOR DETAIL DESIGN	C.A.T.	S.T./E.S.	A.C./M.L.
D	11/03/2022	ISSUE FOR HAZOP	C.A.T.	S.T./E.S.	A.C./M.L.

NESTE

TECHNIP ENERGIES

RDCG (Rotterdam Capacity Growth)
NESTE

UTILITIES MNA

COOLING WATER DISTRIBUTION
PIPING & INSTRUMENT DIAGRAM

TPIT Drawing No						Page	Rev.
082755C Project	053 Unit	PID Doc. Type	00 Disc	31 Subj	0062 Ser.No	1 of 1	2

NESTE Drawing No				
2305 Site	Unit	PID Doc. Type	Drawing Code	Seq.No

This document owned or owned by or under NETTCHNIP ENERGIES ITALY S.p.A. or its affiliate, under this classification, is fully or partially, directly or indirectly, protected copyright, disclosed or used, belong to the exclusive Client. Content, for any purpose and in any manner other than that for which it is specifically provided or authorized in writing by the owner of the copyright or Client.

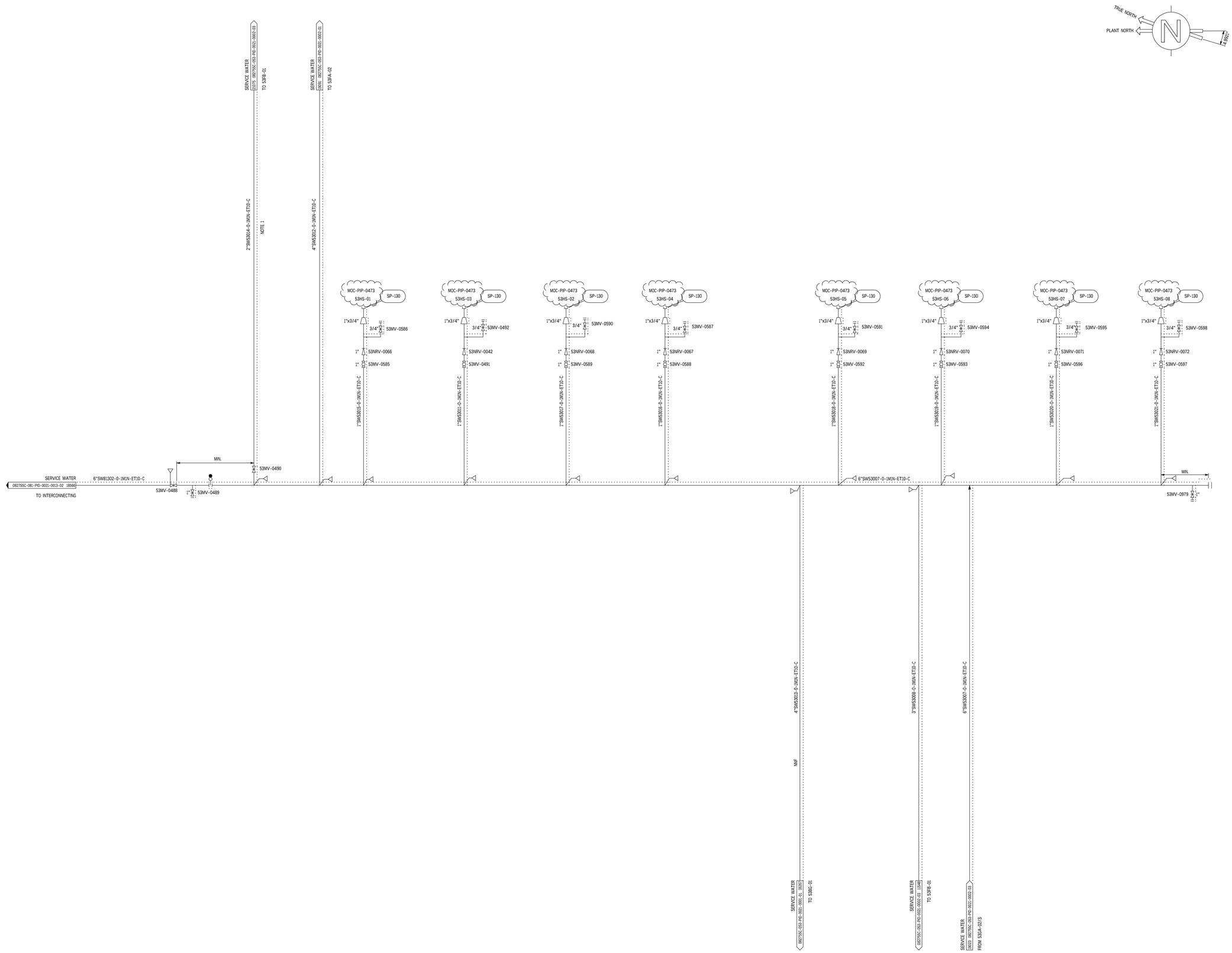

GENERAL NOTES

- FOR GENERAL NOTES AND SYMBOLS REFER TO P&ID'S 082755C-000-PID-0021-01/02/0003.
- ALL INSTRUMENT NOZZLES SHOWN ON EQUIPMENT ARE RATING 300# MINIMUM.
- ALL LOCAL ELECTRONIC INDICATORS HAVE TO BE INSTALLED IN A LOCATION ACCESSIBLE BY OPERATORS (I.E. GROUND LEVEL OR NEAR PLATFORM).
- FLANGES SHALL BE AT LEAST 300# FOR ALL PIPING DRAINS WITH SIZE LOWER THAN 2".
- THE RATING OF THE SAFETY VALVE INLET/OUTLET FLANGES SHALL BE THE SAME OF THE RESPECTIVE INLET/OUTLET LINES RATING UNLESS OTHERWISE SPECIFIED.
- ALL FLANGES/JOINTS THAT ARE ENVISAGED ON THE PIPING IN HYDROCARBON/CHEMICAL SERVICE, WILL BE PROVIDED OVER THE PAVED AREA WITHIN THE PROJECT BATTERY LIMIT.

NOTES

1. LINE USED DURING COMMISSIONING/PRECOMMISSIONING/START-UP PHASE.

Segment Breaks

- End of Group
- Nominal Diameter
- Piping Materials Class
- Max Design Temp. or Press.
- Heat Tracing
- Insulation Requirement
- Coating Requirement
- Supply Responsibility
- Commissioning package
- Design Responsibility
- Norm operating temp or press

CONFIDENTIAL

EQUIPMENT LIST

2	23/04/2024	ISSUE FOR CONSTRUCTION 3	F.G.	S.T./F.F.	C.M./M.L.
1	03/10/2023	ISSUE FOR CONSTRUCTION 2	C.A.T.	S.T./E.S.	A.C./M.L.
0	21/04/2023	ISSUE FOR CONSTRUCTION 1	C.A.T.	S.T./E.S.	A.C./M.L.
E	22/11/2022	ISSUE FOR DETAIL DESIGN	C.A.T.	S.T./E.S.	A.C./M.L.
D	11/03/2022	ISSUE FOR HAZOP	C.A.T.	S.T./E.S.	A.C./M.L.
REV.	DATE	DESCRIPTION	PREP	CKD	APPR

NESTE

TECHNIP ENERGIES

RDCG (Rotterdam Capacity Growth)
NESTE

UTILITIES MNA

SERVICE WATER DISTRIBUTION
PIPING & INSTRUMENT DIAGRAM

TPIT Drawing No						Page	Rev.
082755C	053	PID	00	31	0063	1of 2	2
Project	Unit	Doc. Type	Disc	Subj	Ser.No		

NESTE Drawing No				
2305		PID		
Site	Unit	Doc. Type	Drawing Code	Seq.No

This present document or drawing is property of TECHNIP ENERGIES ITALY S.p.A. and shall not, under any circumstances, be totally or partially, directly or indirectly, reproduced, copied, disclosed or used, without its prior written consent, for any purpose and in any way other than that for which it is specifically furnished or outside the scope of the agreed upon right of use.

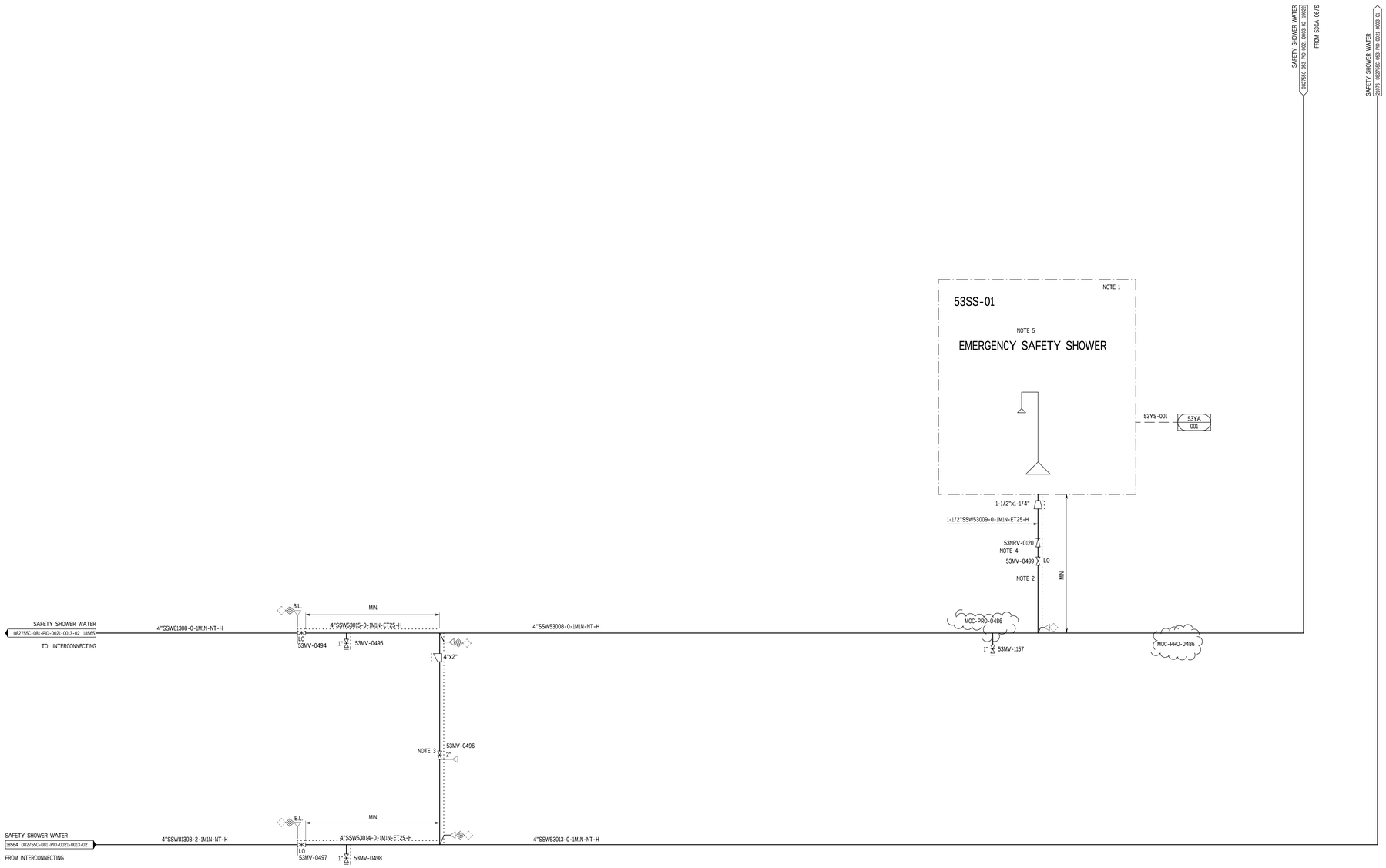

GENERAL NOTES

- FOR GENERAL NOTES AND SYMBOLS REFER TO P&ID'S 082755C-000-PID-0021-0001/0002/0003.
- ALL INSTRUMENT NOZZLES SHOWN ON EQUIPMENT ARE RATING 300# MINIMUM.
- ALL LOCAL ELECTRONIC INDICATORS HAVE TO BE INSTALLED IN A LOCATION ACCESSIBLE BY OPERATORS (I.E. GROUND LEVEL OR NEAR PLATFORM).
- FLANGES SHALL BE AT LEAST 300# FOR ALL PIPING DRAINS WITH SIZE LOWER THAN 2".
- THE RATING OF THE SAFETY VALVE INLET/OUTLET FLANGES SHALL BE THE SAME OF THE RESPECTIVE INLET/OUTLET LINES RATING UNLESS OTHERWISE SPECIFIED.
- ALL FLANGES/JOINTS THAT ARE ENVISAGED ON THE PIPING IN HYDROCARBON/CHEMICAL SERVICE, WILL BE PROVIDED OVER THE PAVED AREA WITHIN THE PROJECT BATTERY LIMIT.

NOTES:

1. FOR SAFETY SHOWER AND EYE WASH LOCATION REFER TO 082755C-053-DW-1933-0011 (NESTE DOC. 2305-053-DW-1933-0002).
2. MAX DISTANCE BETWEEN DISTRIBUTION LINE AND LO VALVE SHALL BE LESS THAN 150 mm.
3. PROVIDE 8 MM HOLE ON VALVE DISC OF BY-PASS VALVE.
4. NRV (NON RETURN VALVE) TO BE SPRING LOADED TYPE.
5. POTABLE EYE WASH TO BE LOCATED TOGETHER WITH SAFETY SHOWER.

Segment Breaks

- End of Group
- Nominal Diameter
- Piping Materials Class
- Max Design Temp. or Press.
- Heat Tracing
- Insulation Requirement
- Coating Requirement
- Supply Responsibility
- Commissioning package
- Design Responsibility
- Norm operating temp or press

CONFIDENTIAL

EQUIPMENT LIST

REV.	DATE	DESCRIPTION	PREP	CKD	APPR
2	23/04/2024	ISSUE FOR CONSTRUCTION 3	F.G.	S.T./F.F.	C.M./M.L.
1	03/10/2023	ISSUE FOR CONSTRUCTION 2	C.A.T.	S.T./E.S.	A.C./M.L.
0	21/04/2023	ISSUE FOR CONSTRUCTION 1	C.A.T.	S.T./E.S.	A.C./M.L.
E	22/11/2022	ISSUE FOR DETAIL DESIGN	C.A.T.	S.T./E.S.	A.C./M.L.
D	11/03/2022	ISSUE FOR HAZOP	C.A.T.	S.T./E.S.	A.C./M.L.

NESTE

TECHNIP ENERGIES

RDCG (Rotterdam Capacity Growth)
NESTE

UTILITIES MNA
EMERGENCY SAFETY SHOWER WATER DISTRIBUTION PIPING & INSTRUMENT DIAGRAM

TPIT Drawing No						Page	Rev.
082755C	053	PID	00	31	0063	2 of 2	2
Project	Unit	Doc. Type	Disc	Subj	Ser.No		

NESTE Drawing No				
2305		PID		
Site	Unit	Doc. Type	Drawing Code	Seq.No

This present document or drawing is property of TECHNIP ENERGIES ITALY S.p.A. and shall not, under any circumstances, be totally or partially, directly or indirectly reproduced, copied, disclosed or used, without its prior written consent, for any purpose and in any way other than that for which it is specifically furnished or outside the scope of the agreed upon right of use.

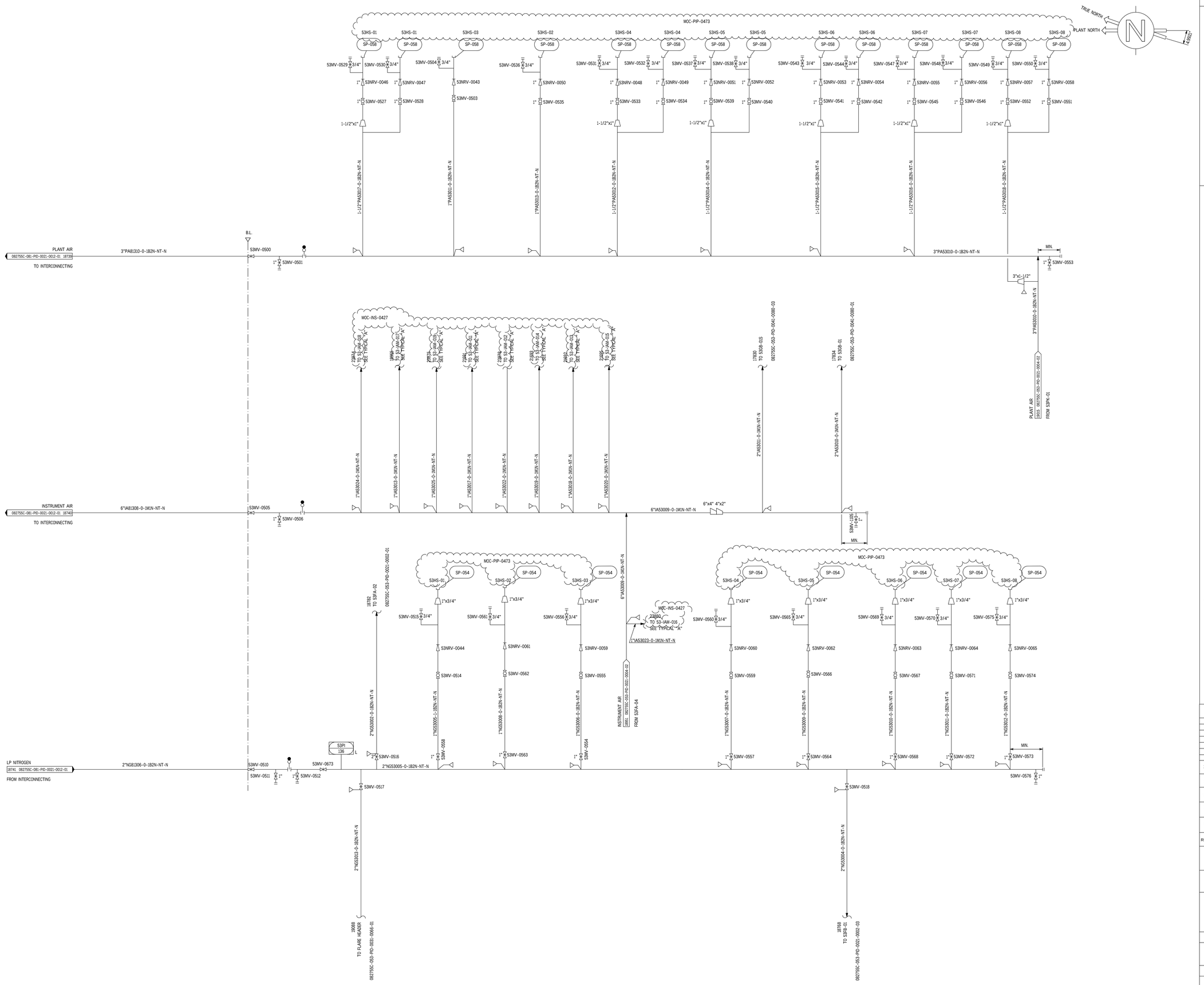

GENERAL NOTES

- FOR GENERAL NOTES AND SYMBOLS REFER TO P&ID'S 082755C-000-PID-0021-0001/0002/0003.
- ALL INSTRUMENT NOZZLES SHOWN ON EQUIPMENT ARE RATING 300# MINIMUM.
- LOCAL ELECTRONIC INDICATORS HAVE TO BE INSTALLED IN A LOCATION ACCESSIBLE BY OPERATORS (I.E. GROUND LEVEL OR NEAR PLATFORM).
- FLANGES SHALL BE AT LEAST 300# FOR ALL PIPING DRAINS WITH SIZE LOWER THAN 2".
- THE RATING OF THE SAFETY VALVE INLET/OUTLET FLANGES SHALL BE THE SAME OF THE RESPECTIVE INLET/OUTLET LINES RATING UNLESS OTHERWISE SPECIFIED.
- ALL FLANGES/JOINTS THAT ARE ENVISAGED ON THE PIPING IN HYDROCARBON/CHEMICAL SERVICE, WILL BE PROVIDED OVER THE PAVED AREA WITHIN THE PROJECT BATTERY LIMIT.

NOTES:

1. DELETED.
2. DELETED.
3. DELETED.

TYPICAL "A"

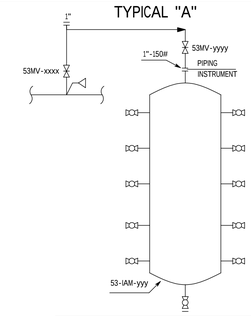

INSTRUMENT AIR MANIFOLD			
53-IAM-01	1"IA53017-0-1M1N-NT-N	53MV-0577	53MV-0578
53-IAM-02	1"IA53022-0-1M1N-NT-N	53MV-0961	53MV-0962
53-IAM-03	1"IA53018-0-1M1N-NT-N	53MV-0579	53MV-0580
53-IAM-04	1"IA53019-0-1M1N-NT-N	53MV-0581	53MV-0582
53-IAM-05	1"IA53020-0-1M1N-NT-N	53MV-0583	53MV-0584
53-IAM-06	1"IA53023-0-1M1N-NT-N	53MV-0963	53MV-0964
53-IAM-07	1"IA53013-0-1M1N-NT-N	53MV-0519	53MV-0520
53-IAM-08	1"IA53024-0-1M1N-NT-N	53MV-0965	53MV-0966
53-IAM-09	1"IA53025-0-1M1N-NT-N	53MV-0967	53MV-0968

MOC-INS-0427

Segment Breaks

- End of Group
- Nominal Diameter
- Piping Materials Class
- Max Design Temp. or Press.
- Heat Tracing
- Insulation Requirement
- Coating Requirement
- Supply Responsibility
- Commissioning package
- Design Responsibility
- Norm operating temp or press

CONFIDENTIAL

EQUIPMENT LIST

REV.	DATE	DESCRIPTION	PREP	CKD	APPR
2	23/04/2024	ISSUE FOR CONSTRUCTION 3	F.G.	S.T./F.F.	C.M./M.L.
1	03/10/2023	ISSUE FOR CONSTRUCTION 2	C.A.T.	S.T./E.S.	A.C./M.L.
0	21/04/2023	ISSUE FOR CONSTRUCTION 1	C.A.T.	S.T./E.S.	A.C./M.L.
E	22/11/2022	ISSUE FOR DETAIL DESIGN	C.A.T.	S.T./E.S.	A.C./M.L.
D	01/03/2022	ISSUE FOR HAZOP	C.A.T.	S.T./E.S.	A.C./M.L.

NESTE

TECHNIP ENERGIES

RDCG (Rotterdam Capacity Growth)
NESTE

UTILITIES MNA

AIR AND GAS DISTRIBUTION

PIPING & INSTRUMENT DIAGRAM

TPIT Drawing No					Page	Rev.
082755C	053	PID	00	31	0064	1 of 2	2
Project	Unit	Doc. Type	Disc	Subj	Ser.No		

NESTE Drawing No				
2305		PID		
Site	Unit	Doc. Type	Drawing Code	Seq.No

This present document or drawing is property of TECHNIP ENERGIES ITALY S.p.A. and cannot, under any circumstances, be totally or partially, directly or indirectly, transferred, reproduced, copied, disclosed or used, without its prior written consent, for any purpose and in any way other than that for which it is specifically furnished or outside the scope of the agreed upon right of use.

GENERAL NOTES

- FOR GENERAL NOTES AND SYMBOLS REFER TO P&ID'S 082755C-000-PID-0021-0001/0002/0003.
- ALL INSTRUMENT NOZZLES SHOWN ON EQUIPMENT ARE RATING 300# MINIMUM.
- ALL LOCAL ELECTRONIC INDICATORS HAVE TO BE INSTALLED IN A LOCATION ACCESSIBLE BY OPERATORS (I.E. GROUND LEVEL OR NEAR PLATFORM).
- FLANGES SHALL BE AT LEAST 300# FOR ALL PIPING DRAINS WITH SIZE LOWER THAN 2".
- THE RATING OF THE SAFETY VALVE INLET/OUTLET FLANGES SHALL BE THE SAME OF THE RESPECTIVE INLET/OUTLET LINES RATING UNLESS OTHERWISE SPECIFIED.

DETAIL "A"

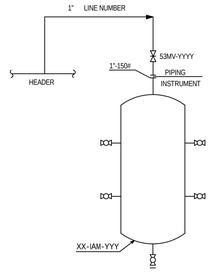

INSTRUMENT AIR MANIFOLD

TAG	LINE NUMBER	VALVE NUMBER 52MV-YYYY
53IAM-021	1"IA53021-0-1M1N-NT-N	53MV-1152

Segment Breaks

- End of Group
- Nominal Diameter
- Piping Materials Class
- Max Design Temp. or Press.
- Heat Tracing
- Insulation Requirement
- Coating Requirement
- Supply Responsibility
- Commissioning package
- Design Responsibility
- Norm operating temp or press

CONFIDENTIAL

EQUIPMENT LIST

REV.	DATE	DESCRIPTION	PREP	CKD	APPR
0	06/05/2024	ISSUE FOR CONSTRUCTION 3	F.G.	S.T./F.F.	C.M./M.L.

NESTE

TEN TECHNIP ENERGIES

RDCG (Rotterdam Capacity Growth)
NESTE

UTILITIES MNA

INSTRUMENT AIR DISTRIBUTION

PIPING & INSTRUMENT DIAGRAM

TPIT Drawing No						Page	Rev.
082755C	053	PID	00	31	0064	2 of 2	0
Project	Unit	Doc. Type	Disc	Subj	Ser.No		

NESTE Drawing No				
2305		PID		
Site	Unit	Doc. Type	Drawing Code	Seq.No

The present document is drawing is property of TECHNIP ENERGIES ITALY S.p.A. and shall not, either by reproduction, including by partially or directly, transmitted, reproduced, copied, disclosed or used, without its prior written consent, for any purpose and in any way other than for which it is specifically furnished or outside the extent of the agreed upon right of use.

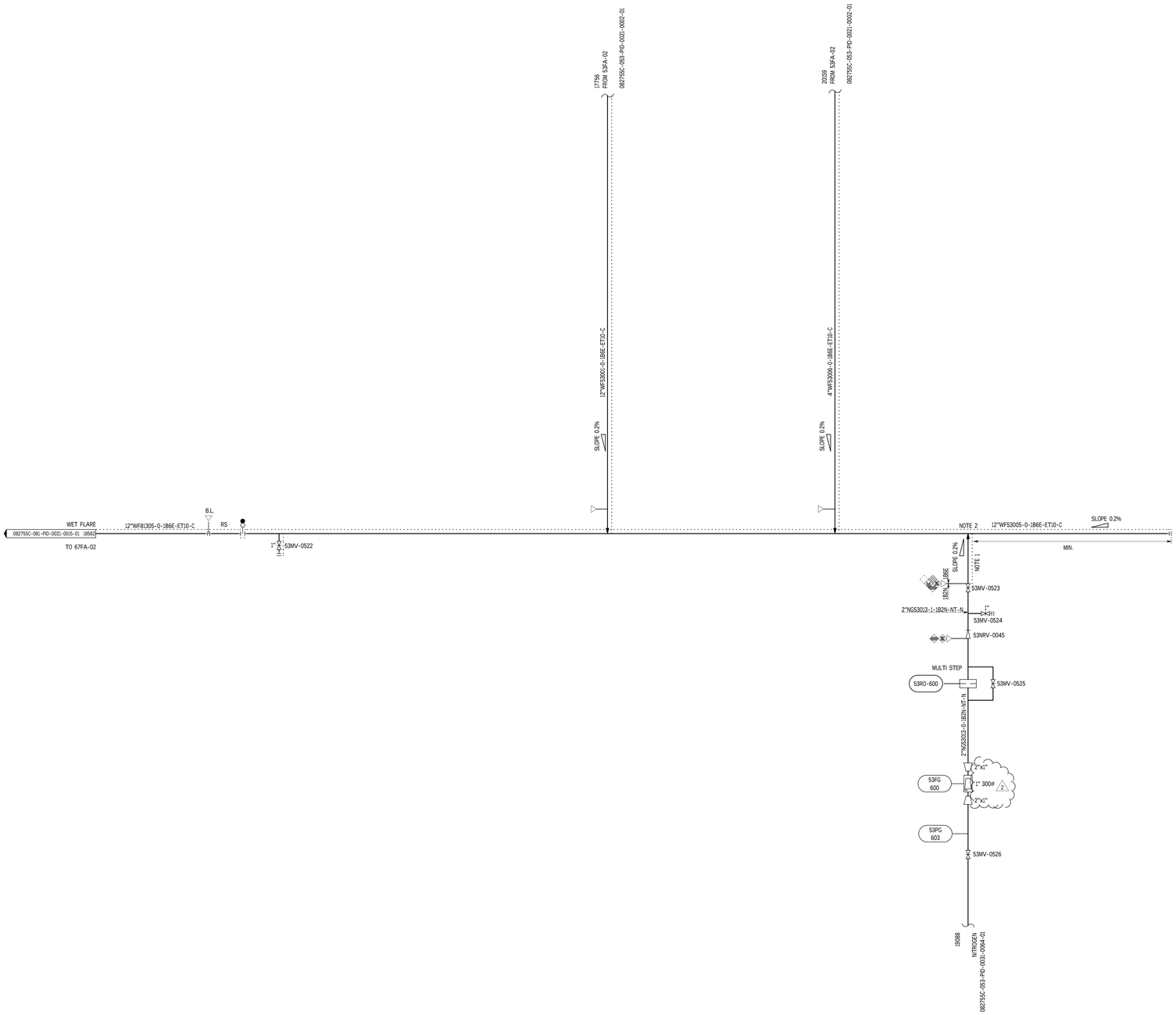

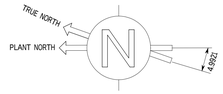

GENERAL NOTES

- FOR GENERAL NOTES AND SYMBOLS REFER TO P&ID'S 082755C-000-PID-0021-001/0002/0003.
- ALL INSTRUMENT NOZZLES SHOWN ON EQUIPMENT ARE RATING 300# MINIMUM.
- ALL LOCAL ELECTRONIC INDICATORS HAVE TO BE INSTALLED IN A LOCATION ACCESSIBLE BY OPERATORS (I.E. GROUND LEVEL OR NEAR PLATFORM).
- FLANGES SHALL BE AT LEAST 300# FOR ALL PIPING DRAINS WITH SIZE LOWER THAN 2".
- THE RATING OF THE SAFETY VALVE INLET/OUTLET FLANGES SHALL BE THE SAME OF THE RESPECTIVE INLET/OUTLET LINES RATING UNLESS OTHERWISE SPECIFIED.
- ALL FLANGES/JOINTS THAT ARE ENVISAGED ON THE PIPING IN HYDROCARBON/CHEMICAL SERVICE, WILL BE PROVIDED OVER THE PAVED AREA WITHIN THE PROJECT BATTERY LIMIT.

NOTES:

1. DELETED.
2. PROVIDE TOP CONNECTION.
3. DELETED.
4. DELETED.

2

Segment Breaks

- End of Group
- Nominal Diameter
- Piping Materials Class
- Max Design Temp. or Press.
- Heat Tracing
- Insulation Requirement
- Coating Requirement
- Supply Responsibility
- Commissioning package
- Design Responsibility
- Norm operating temp or press

CONFIDENTIAL

EQUIPMENT LIST

REV.	DATE	DESCRIPTION	PREP	CKD	APPR
2	23/04/2024	ISSUE FOR CONSTRUCTION 3	F.G.	S.T./F.F.	C.M./M.L.
1	03/10/2023	ISSUE FOR CONSTRUCTION 2	C.A.T.	S.T./E.S.	A.C./M.L.
0	21/04/2023	ISSUE FOR CONSTRUCTION 1	C.A.T.	S.T./E.S.	A.C./M.L.
E	22/11/2022	ISSUE FOR DETAIL DESIGN	C.A.T.	S.T./E.S.	A.C./M.L.
D	11/03/2022	ISSUE FOR HAZOP	C.A.T.	S.T./E.S.	A.C./M.L.

NESTE

TECHNIP ENERGIES

RDCG (Rotterdam Capacity Growth)
NESTE

UTILITIES MNA

FLARE HEADERS DISTRIBUTION
PIPING & INSTRUMENT DIAGRAM

TPIT Drawing No						Page	Rev.
082755C	053	PID	00	31	0066	1 of 1	2
Project	Unit	Doc. Type	Disc	Subj	Ser.No		

NESTE Drawing No					
2305		PID			
Site	Unit	Doc. Type	Drawing Code	Seq.No	

This printed document or stored in electronic is property of TECHNIP ENERGIES ITALY S.p.A. and shall not, under any circumstance, be totally or partially, directly or indirectly transferred, transmitted, copied, disclosed or used, without its prior written consent, for any purpose and in any way other than for which it is specifically furnished or outside the extent of the agreed upon right of use.

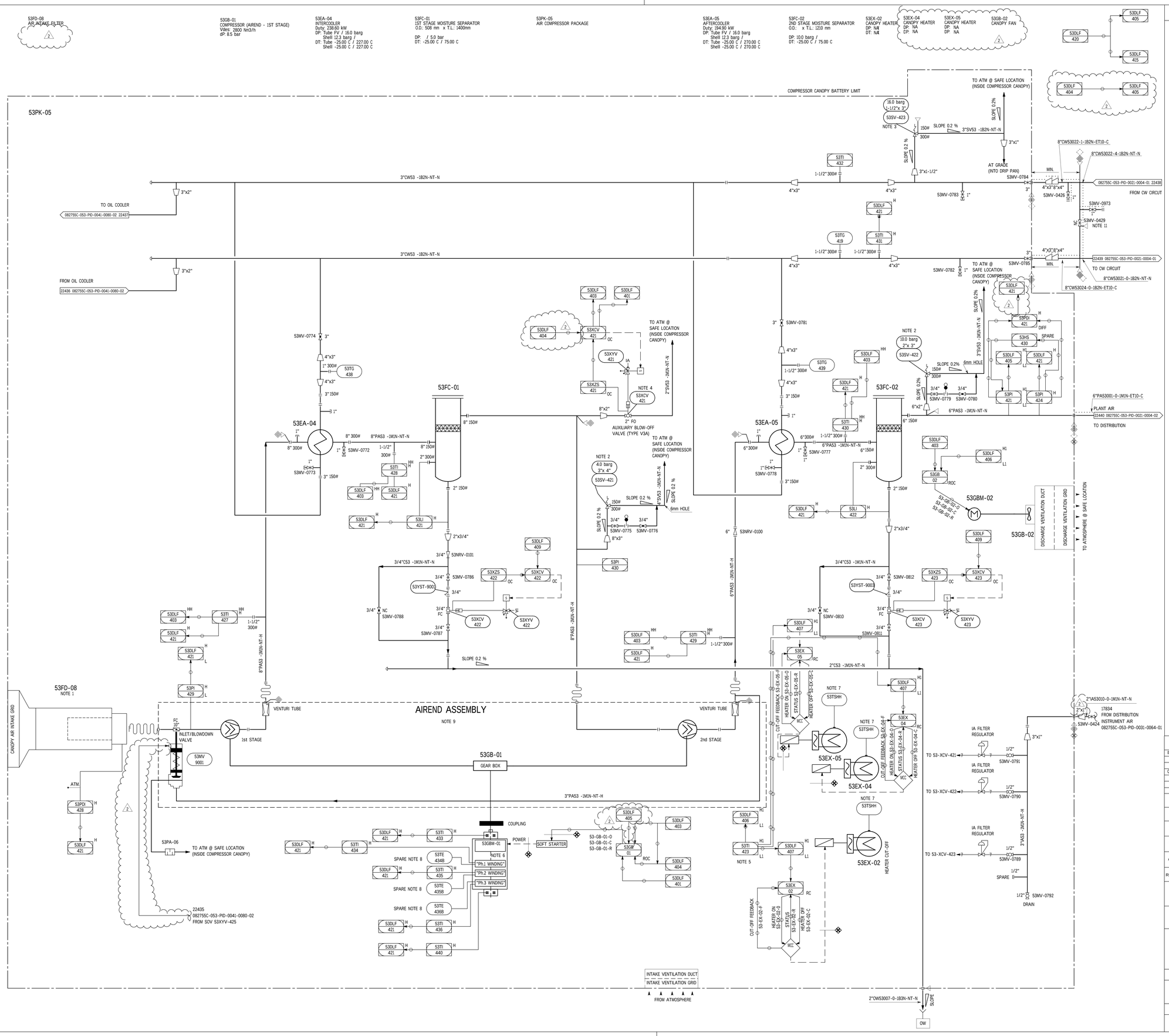

GENERAL NOTES

- FOR GENERAL NOTES AND SYMBOLS REFER TO P&ID'S 082755C-000-PID-0021-0001/0002/0003.
- COMPRESSOR SKID IS PROVIDED WITH A CANOPY.
  NORMAL OPERATING TEMPERATURE INSIDE CANOPY: +5°C.
  AN AMBIENT HEATER (53EX-02) IS INSTALLED INSIDE THE CANOPY,
  IN ORDER TO KEEPMINIMUM TEMP. OF +5°C.
- FOR LINES IN VENDOR SCOPE LINE NUMBERS ARE NOT INDICATED SINCE THIS A PACKAGED EQUIPMENT.
  ALL LINES IN VENDOR SCOPE ARE INSIDE COMPRESSOR CANOPY.
  DECLARATION OF CONFORMITY TO MACHINERY DIRECTIVE 2006/42/EC BY ANNEX II.1.A UNDER VENDOR SCOPE.

NOTES:

1. AIR INTAKE FILTER: SINGLE STAGE, MANUFACTURER STANDARD DESIGN. IT IS INSTALLED INSIDE COMPRESSOR CANOPY.
2. SIZING BASIS: "BLOCKED DISCHARGE".
3. SIZING BASIS: "THERMAL EXPANSIONS".
4. 53-XCV-421 OPENS WHENEVER COMPRESSOR STOPS BY COMMON STOP FOR ANY REASONS.
5. AMBIENT TEMP. TRANSMITTER INSTALLED INSIDE COMPRESSOR CANOPY.
6. MAIN MOTOR WILL BE EQUIPPED WITH:
   NO.2 RTD SINGLE TYPE FOR EACH WINDING.
   NO 1 RTD DUPLEX TYPE FOR EACH BEARING.
7. TEMPERATURE SWITCH FOR OVERHEATING PROTECTION.
8. SPARE RTD FOR REDUNDANCY PURPOSE NOT WIRED TO ANY TRANSMITTER.
9. COMPRESSOR AIR ENDS ARE EQUIPPED WITH SKF VIBRATION PADS COMPATIBLE WITH SKF CMSS 908-MD MAGNETIC BASE.
10. LOCATION OF AIR COMPRESSOR INTAKE SHALL BE SUCH AS TO AVOID CONTAMINATION OF INSTRUMENT AIR BY POLLUTANTS.
11. PROVIDE 8 MM HOLE ON VALVE DISC OF BY-PASS VALVE FOR WINTERIZATION PURPOSE.

53DLF 401	AIR COMPRESSORS AUTOSTART
53DLF 403	AIR COMPRESSOR 53PK-05 COMMON STOP
53DLF 404	AIR COMPRESSOR 53PK-05 AUTOMATIC CONTROL
53DLF 405	AIR COMPRESSOR 53PK-05 LOAD/UNLOAD CONTROL
53DLF 406	CANOPY FAN 53GB-02 CONTROL
53DLF 407	CANOPY HEATER 53EX-02, 53EX-04 & 53EX-05 CONTROL
53DLF 409	AIR COMPRESSOR 53PK-05 CONDENSATE DISCHARGE VALVES CONTROL
53DLF 415	AIR COMPRESSOR 53PK-05S LOAD/UNLOAD CONTROL
53DLF 420	AIR COMPRESSOR 53PK-05/S DUTY/STANBY SELECTION
53DLF 421	AIR COMPRESSOR 53PK-05 COMMON ALARM

Segment Breaks

- End of Group
- Nominal Diameter
- Piping Materials Class
- Max Design Temp. or Press.
- Heat Tracing
- Insulation Requirement
- Coating Requirement
- Supply Responsibility
- Commissioning package
- Design Responsibility
- Norm operating temp or press

CONFIDENTIAL

EQUIPMENT LIST

INTAKE FILTER	COMPRESSOR	INTERCOOLER	AFTERCOOLER	1st STAGE SEP.	2nd STAGE SEP.
53FD-08	53GB-01	53EA-04	53EA-05	53FC-01	53FC-02
CANOPY FAN	CANOPY HEATER	SILENCER			
53GB-02	53EX-02	53PA-06			

REV.	DATE	DESCRIPTION	PREP	CKD	APPR
2	23/04/2024	ISSUE FOR CONSTRUCTION 3	F.G.	S.T./F.F.	C.M./M.L.
1	03/10/2023	ISSUE FOR CONSTRUCTION 2	C.A.T.	S.T./E.S.	A.C./M.L.
0	31/05/2023	ISSUE FOR CONSTRUCTION 1	C.A.T.	S.T./E.S.	A.C./M.L.
A	03/02/2023	ISSUE FOR DETAIL DESIGN	C.A.T.	S.T./E.S.	A.C./M.L.

NESTE

TECHNIP ENERGIES

RDCG (Rotterdam Capacity Growth)
NESTE

UTILITIES MNA

53PK-05 AIR COMPRESSOR PACKAGE
PIPING & INSTRUMENT DIAGRAM

TPIT Drawing No						Page	Rev.
082755C	053	PID	00	41	0080	1 of 4	2
Project	Unit	Doc. Type	Disc	Subj	Ser.No		

NESTE Drawing No				
2305		PID		
Site	Unit	Doc. Type	Drawing Code	Seq.No

The present document or drawing is property of TECHNIP ENERGIES ITALY S.p.A. and shall not, under any circumstances, be made or partially directly or indirectly, transferred, conveyed, copied, disclosed or used, without its prior written consent, for any purpose and in any way other than for which it is specifically furnished or outside the extent of the agreed upon right of use.

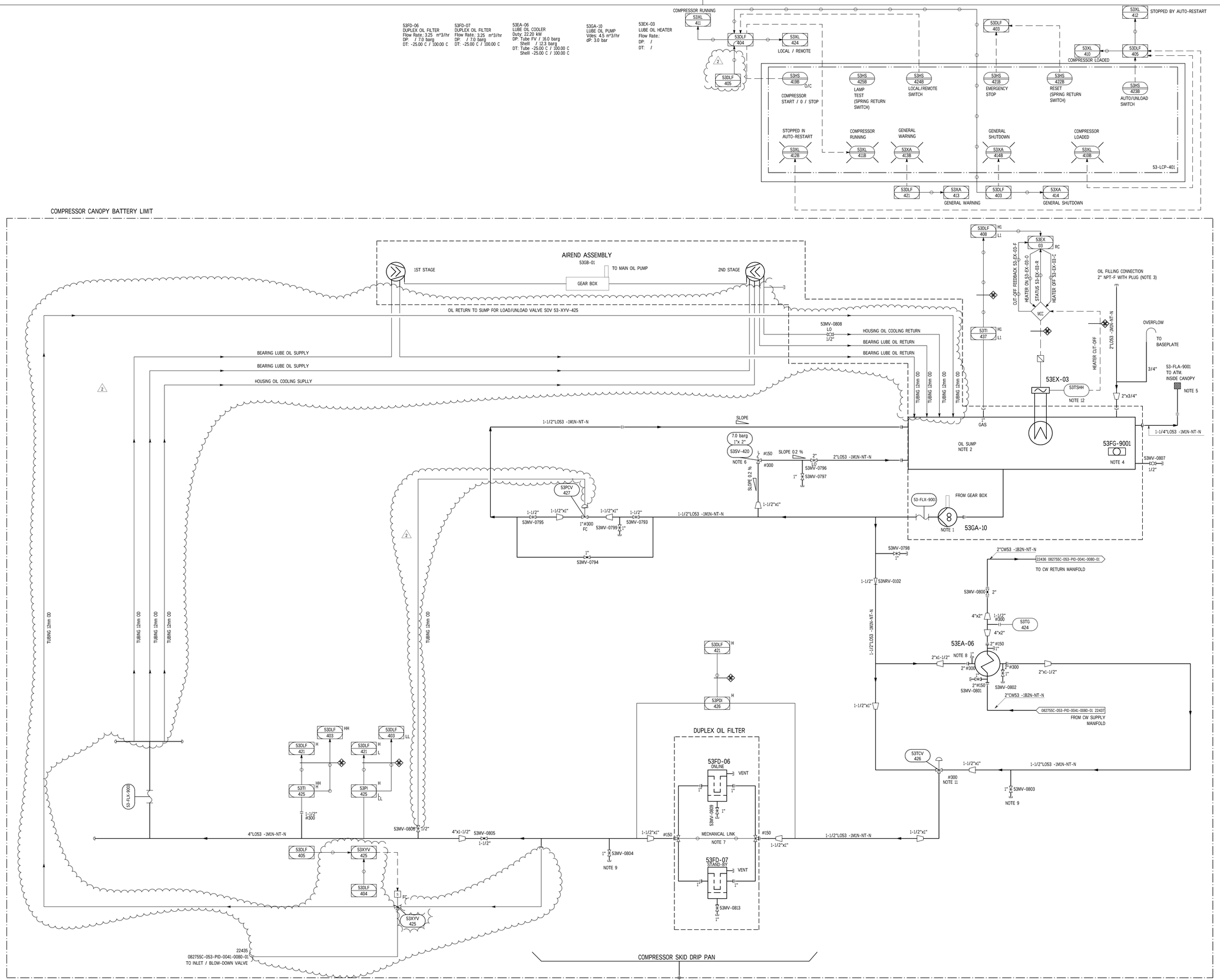

GENERAL NOTES

- FOR GENERAL NOTES AND SYMBOLS REFER TO P&ID'S 082755C-000-PID-0021-0001/0002/0003.
- COMPRESSOR SKID IS PROVIDED WITH A CANOPY.
  NORMAL OPERATING TEMPERATURE INSIDE CANOPY: +5°C.
  AN AMBIENT HEATER (53EX-02) IS INSTALLED INSIDE THE CANOPY,
  IN ORDER TO KEEPMINIMUM TEMP. OF +5°C.
- FOR LINES IN VENDOR SCOPE LINE NUMBERS ARE NOT INDICATED SINCE THIS IS A PACKAGED EQUIPMENT. ALL LINES IN VENDOR SCOPE ARE INSIDE COMPRESSOR CANOPY. DECLARATION OF CONFORMITY TO MACHINERY DIRECTIVE 2006/42/EC BY ANNEX II. 1.A UNDER VENDOR SCOPE.

NOTES:

1. THE COMPRESSOR USES THE MAIN MOTOR IN ORDER TO DRIVE BOTH STAGES OF COMPRESSION AND MAIN OIL PUMP.
2. OIL SUMP IS EMBEDDED IN AIREND CASING.
3. OIL FILLING WILL BE CARRIED OUT WITH MOBILE FILLING PUMP (PROVIDED BY COMPRESSOR MFR).
4. OIL SIGHT GLASS DIRECTLY INSTALLED ON AIREND SUMP; IT IS ACCESSIBLE AND VISIBLE FROM OIL FILLING CONNECTION.
5. OIL VAPOUR DEMISTER WITH FLAME ARRESTOR.
6. SIZING BASIS: "BLOCKED DISCHARGE".
7. MANUAL CHANGE-OVER VALVE IS PART OF DUPLEX LUBE OIL FILTER.
8. HIGH POINT VENT.
9. LOW POINT DRAIN.
10. LUBE OIL VISCOSITY GRADE: ISO VG #46.
11. THERMOSTATIC CONTROL VALVE MIXES HOT AND COLD OIL TO ACHIEVE THE SET POINT TEMPERATURE. TEMPERATURE CONTROL IS CARRIED OUT OUT AT VALVE DISCHARGE.
12. TEMPERATURE SWITCH FOR OVERHEATING PROTECTION.

53DLF 403	AIR COMPRESSOR 53PK-05 COMMON STOP
53DLF 404	AIR COMPRESSOR 53PK-05 AUTOMATIC CONTROL
53DLF 405	AIR COMPRESSOR 53PK-05 LOAD/UNLOAD CONTROL
53DLF 408	LUBE OIL HEATER 53EX-03 CONTROL
53DLF 421	AIR COMPRESSOR 53PK-05/S COMMON ALARM

Segment Breaks

- End of Group
- Nominal Diameter
- Piping Materials Class
- Max Design Temp. or Press.
- Heat Tracing
- Insulation Requirement
- Coating Requirement
- Supply Responsibility
- Commissioning package
- Design Responsibility
- Norm operating temp or press

CONFIDENTIAL

EQUIPMENT LIST

OIL COOLER	ONLINE FILTER	STAND-BY FILTER	OIL PUMP	OIL HEATER
53EA-06	53FD-06	53FD-07	53GA-10	53EX-03

REV.	DATE	DESCRIPTION	PREP	CKD	APPR
2	23/04/2024	ISSUE FOR CONSTRUCTION 3	F.G.	S.T./F.F.	C.M./M.L.
1	03/10/2023	ISSUE FOR CONSTRUCTION 2	C.A.T.	S.T./E.S.	A.C./M.L.
0	31/05/2023	ISSUE FOR CONSTRUCTION 1	C.A.T.	S.T./E.S.	A.C./ M.L.
A	03/02/2023	ISSUE FOR DETAIL DESIGN	C.A.T.	S.T./E.S.	A.C./ M.L.

NESTE

TECHNIP ENERGIES

RDCG (Rotterdam Capacity Growth)
NESTE

UTILITIES MNA

53GB-01 LUBE OIL SYSTEM

PIPING & INSTRUMENT DIAGRAM

TPIT Drawing No						Page	Rev.
082755C	053	PID	00	41	0080	2 of 4	2
Project	Unit	Doc. Type	Disc	Subj	Ser.No		

NESTE Drawing No

2305		PID		
Site	Unit	Doc. Type	Drawing Code	Seq.No

The present document is property of TECHNIP ENERGIES ITALY S.p.A. and shall not, under any circumstances, be made or partially, directly or indirectly, transferred, conveyed, copied, disclosed or used, without prior written consent, for any purpose and in any way other than that for which it is specifically furnished or outside the extent of the agreed upon right of use.

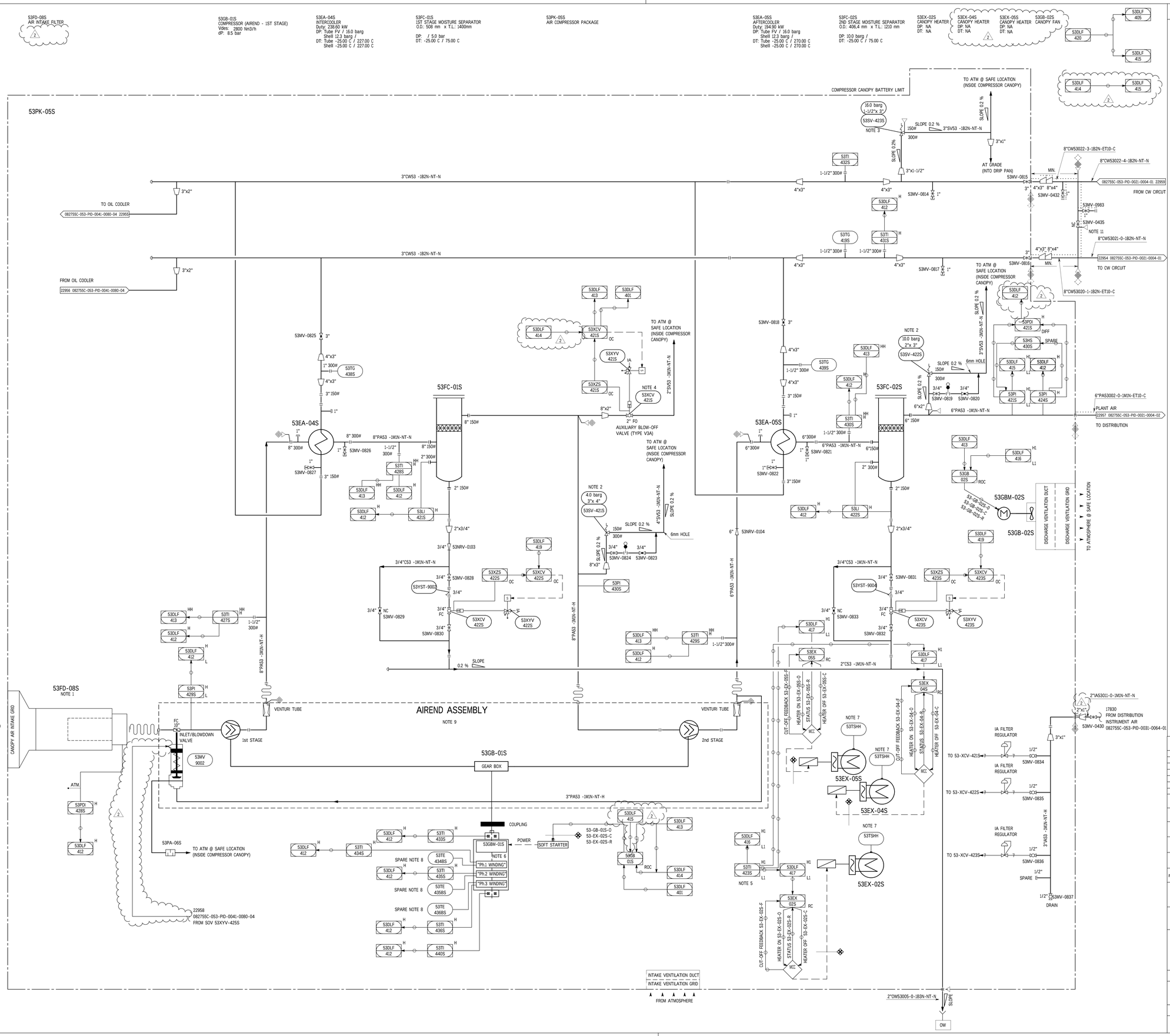

GENERAL NOTES

- FOR GENERAL NOTES AND SYMBOLS REFER TO P&ID'S 082755C-000-PID-0021-0001/0002/0003.
- COMPRESSOR SKID IS PROVIDED WITH A CANOPY.
  NORMAL OPERATING TEMPERATURE INSIDE CANOPY: +5°C.
  AN AMBIENT HEATER (53EX-02S) IS INSTALLED INSIDE THE CANOPY,
  IN ORDER TO KEEPMINIMUM TEMP. OF +5°C.
- FOR LINES IN VENDOR SCOPE LINE NUMBERS ARE NOT INDICATED SINCE THIS A PACKAGED EQUIPMENT.
  ALL LINES IN VENDOR SCOPE ARE INSIDE COMPRESSOR CANOPY.
  DECLARATION OF CONFORMITY TO MACHINERY DIRECTIVE 2006/42/EC BY ANNEX II.1.A UNDER VENDOR SCOPE.

NOTES:

1. AIR INTAKE FILTER: SINGLE STAGE, MANUFACTURER STANDARD DESIGN. IT IS INSTALLED INSIDE COMPRESSOR CANOPY.
2. SIZING BASIS: "BLOCKED DISCHARGE".
3. SIZING BASIS: "THERMAL EXPANSIONS".
4. 53-XCV-421S OPENS WHENEVER COMPRESSOR STOPS BY COMMON STOP FOR ANY REASONS.
5. AMBIENT TEMP. TRANSMITTER INSTALLED INSIDE COMPRESSOR CANOPY.
6. MAIN MOTOR WILL BE EQUIPPED WITH:
   NO.2 RTD SINGLE TYPE FOR EACH WINDING.
   NO 1 RTD DUPLEX TYPE FOR EACH BEARING.
7. TEMPERATURE SWITCH FOR OVERHEATING PROTECTION.
8. SPARE RTD FOR REDUNDANCY PURPOSE NOT WIRED TO ANY TRANSMITTER.
9. COMPRESSOR AIR ENDS ARE EQUIPPED WITH SKF VIBRATION PADS COMPATIBLE WITH SKF CMSS 908-MD MAGNETIC BASE.
10. LOCATION OF AIR COMPRESSOR INTAKE SHALL BE SUCH AS TO AVOID CONTAMINATION OF INSTRUMENT AIR BY POLLUTANTS.
11. PROVIDE 8 MM HOLE ON VALVE DISC OF BY-PASS VALVE FOR WINTERZATION PURPOSE.

53DLF 401	AIR COMPRESSORS AUTOSTART
53DLF 405	AIR COMPRESSOR 53PK-05 LOAD/UNLOAD CONTROL
53DLF 412	AIR COMPRESSOR 53PK-05S COMMON ALARM
53DLF 413	AIR COMPRESSOR 53PK-05S COMMON STOP
53DLF 414	AIR COMPRESSOR 53PK-05S AUTOMATIC CONTROL
53DLF 415	AIR COMPRESSOR 53PK-05S LOAD/UNLOAD CONTROL
53DLF 416	CANOPY FAN 53GB-02S CONTROL
53DLF 417	CANOPY HEATER 53EX-02S, 53EX-04S & 53EX-05S CONTROL
53DLF 419	AIR COMPRESSOR 53PK-05S CONDENSATE DISCHARGE VALVES CONTROL
53DLF 420	AIR COMPRESSOR 53PK-05/S DUTY/STANBY SELECTION

Segment Breaks

- End of Group
- Nominal Diameter
- Piping Materials Class
- Max Design Temp. or Press.
- Heat Tracing
- Insulation Requirement
- Coating Requirement
- Supply Responsibility
- Commissioning package
- Design Responsibility
- Norm operating temp or press

CONFIDENTIAL

EQUIPMENT LIST

INTAKE FILTER	COMPRESSOR	INTERCOOLER	AFTERCOOLER	1st STAGE SEP.	2nd STAGE SEP.
53FD-08S	53GB-01S	53EA-04S	53EA-05S	53FC-01S	53FC-02S
CANOPY FAN	CANOPY HEATER	SILENCER			
53GB-02S	53EX-02S	53PA-06S			

REV.	DATE	DESCRIPTION	PREP	CKD	APPR
2	23/04/2024	ISSUE FOR CONSTRUCTION 3	F.G.	S.T./F.F.	C.M./M.L.
1	03/10/2023	ISSUE FOR CONSTRUCTION 2	C.A.T.	S.T./E.S.	A.C./M.L.
0	31/05/2023	ISSUE FOR CONSTRUCTION 1	C.A.T.	S.T./E.S.	A.C./M.L.
A	03/02/2023	ISSUE FOR DETAIL DESIGN	C.A.T.	S.T./E.S.	A.C./M.L.

NESTE

T.EN TECHNIP ENERGIES

RDCG (Rotterdam Capacity Growth)
NESTE

UTILITIES MNA

53PK-05S AIR COMPRESSOR PACKAGE PIPING & INSTRUMENT DIAGRAM

TPIT Drawing No					Page	Rev.
082755C	053	PID	00	41	0080	3 of 4	2
Project	Unit	Doc. Type	Disc	Subj	Ser.No		

NESTE Drawing No				
2305		PID		
Site	Unit	Doc. Type	Drawing Code	Seq.No

This present document, or extract is property of TECHNIP ENERGIES ITALY S.p.A. and shall not, under any circumstances, be sold to or partially, directly or indirectly transferred, transmitted, copied, disclosed or used, without its prior written consent, for any purpose and in any way other than that for which it is specifically furnished or outside the extent of the agreed upon right of use.

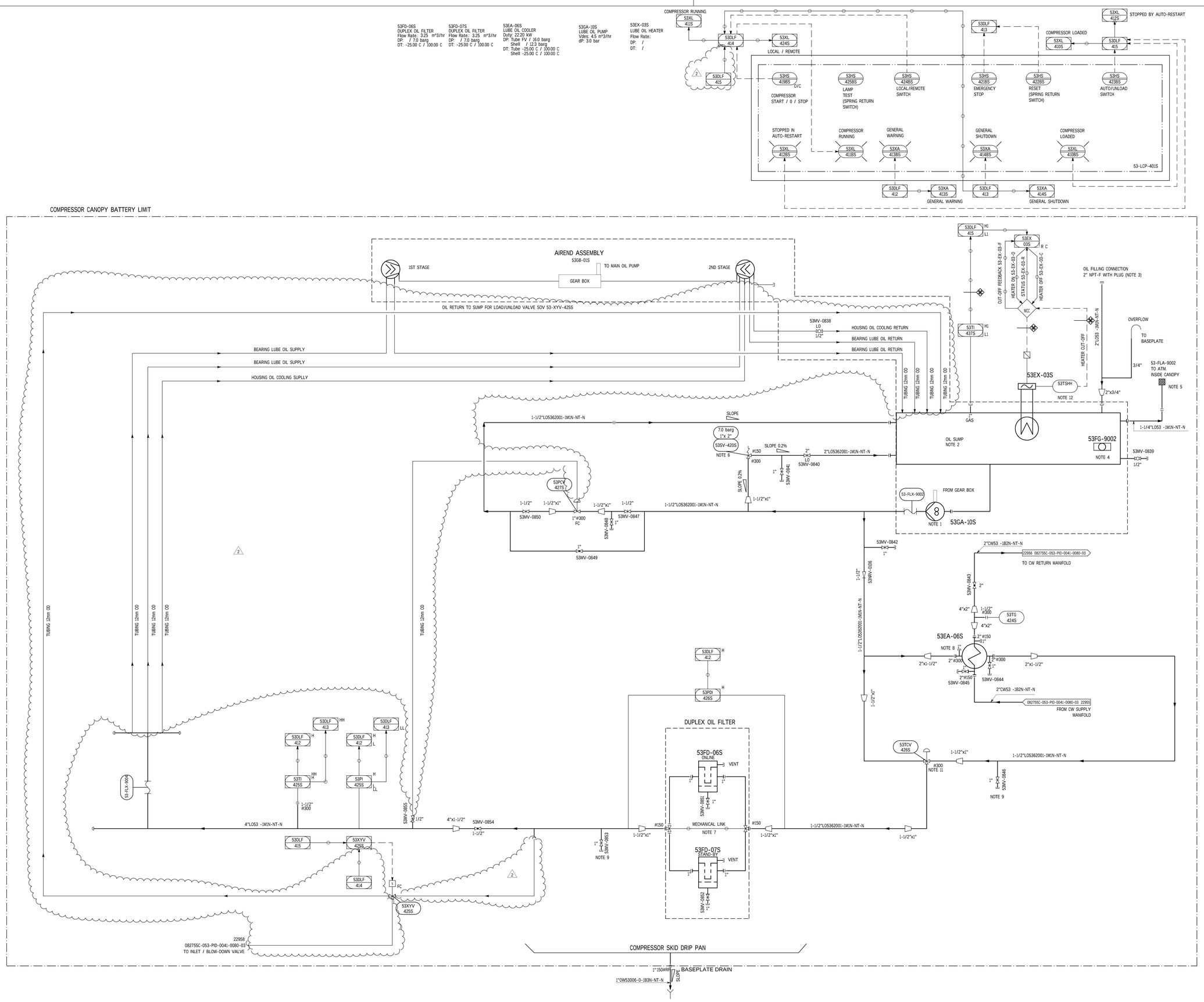

GENERAL NOTES

- FOR GENERAL NOTES AND SYMBOLS REFER TO P&ID'S 082755C-000-PID-0021-0001/0002/0003.
- COMPRESSOR SKID IS PROVIDED WITH A CANOPY.
  NORMAL OPERATING TEMPERATURE INSIDE CANOPY: +5°C.
  AN AMBIENT HEATER (53EX-02S) IS INSTALLED INSIDE THE CANOPY,
  IN ORDER TO KEEPMINIMUM TEMP. OF +5°C.
- FOR LINES IN VENDOR SCOPE LINE NUMBERS ARE NOT INDICATED SINCE THIS IS A PACKAGED EQUIPMENT. ALL LINES IN VENDOR SCOPE ARE INSIDE COMPRESSOR CANOPY. DECLARATION OF CONFORMITY TO MACHINERY DIRECTIVE 2006/42/EC BY ANNEX II. 1.A UNDER VENDOR SCOPE.

NOTES:

1. THE COMPRESSOR USES THE MAIN MOTOR IN ORDER TO DRIVE BOTH STAGES OF COMPRESSION AND MAIN OIL PUMP.
2. OIL SUMP IS EMBEDDED IN AIREND CASING.
3. OIL FILLING WILL BE CARRIED OUT WITH MOBILE FILLING PUMP (PROVIDED BY COMPRESSOR MFR).
4. OIL SIGHT GLASS DIRECTLY INSTALLED ON AIREND SUMP; IT IS ACCESSIBLE AND VISIBLE FROM OIL FILLING CONNECTION.
5. OIL VAPOUR DEMISTER WITH FLAME ARRESTOR.
6. SIZING BASIS: "BLOCKED DISCHARGE".
7. MANUAL CHANGE-OVER VALVE IS PART OF DUPLEX LUBE OIL FILTER.
8. HIGH POINT VENT.
9. LOW POINT DRAIN.
10. LUBE OIL VISCOSITY GRADE: ISO VG #46.
11. THERMOSTATIC CONTROL VALVE MIXES HOT AND COLD OIL TO ACHIEVE THE SET POINT TEMPERATURE. TEMPERATURE CONTROL IS CARRIED OUT OUT AT VALVE DISCHARGE.
12. TEMPERATURE SWITCH FOR OVERHEATING PROTECTION.

530LF 412	AIR COMPRESSOR 53PK-05/S COMMON ALARM
530LF 413	AIR COMPRESSOR 53PK-05S COMMON STOP
530LF 414	AIR COMPRESSOR 53PK-05S AUTOMATIC CONTROL
530LF 415	AIR COMPRESSOR 53PK-05S LOAD/UNLOAD CONTROL
530LF 418	LUBE OIL HEATER 53EX-03S CONTROL

Segment Breaks

- End of Group
- Nominal Diameter
- Piping Materials Class
- Max Design Temp. or Press.
- Heat Tracing
- Insulation Requirement
- Coating Requirement
- Supply Responsibility
- Commissioning package
- Design Responsibility
- Norm operating temp or press

CONFIDENTIAL

EQUIPMENT LIST

OIL COOLER	ONLINE FILTER	STAND-BY FILTER	OIL PUMP	OIL HEATER
53EA-06S	53FD-06S	53FD-07S	53GA-10S	53EX-03S

REV.	DATE	DESCRIPTION	PREP	CKD	APPR
2	23/04/2024	ISSUE FOR CONSTRUCTION 3	F.G.	S.T./F.F.	C.M./M.L.
1	03/10/2023	ISSUE FOR CONSTRUCTION 2	C.A.T.	S.T./E.S.	A.C./M.L.
0	31/05/2023	ISSUE FOR CONSTRUCTION 1	C.A.T.	S.T./E.S.	A.C./ M.L.
A	03/02/2023	ISSUE FOR DETAIL DESIGN	C.A.T.	S.T./E.S.	A.C./ M.L.

NESTE

TECHNIP ENERGIES

RDCG (Rotterdam Capacity Growth)
NESTE

UTILITIES MNA

53GB-01S LUBE OIL SYSTEM

PIPING & INSTRUMENT DIAGRAM

TPIT Drawing No						Page	Rev.
082755C	053	PID	00	41	0080	4 of 4	2
Project	Unit	Doc. Type	Disc	Subj	Ser.No		

NESTE Drawing No

2305		PID		
Site	Unit	Doc. Type	Drawing Code	Seq.No

The present document or drawing is property of TECHNIP ENERGIES ITALY S.p.A. and it shall not, under any circumstances, be lodged, or partially, directly or indirectly, transmitted, copied, disclosed or used, without its prior written consent, for any purpose and in any way other than the for which it is specifically forwarded or outside the extent of the agreed upon right of use.

MACHINE MONITORING SYSTEM FOR " COOLING WATER CIRCULATION PUMPS"

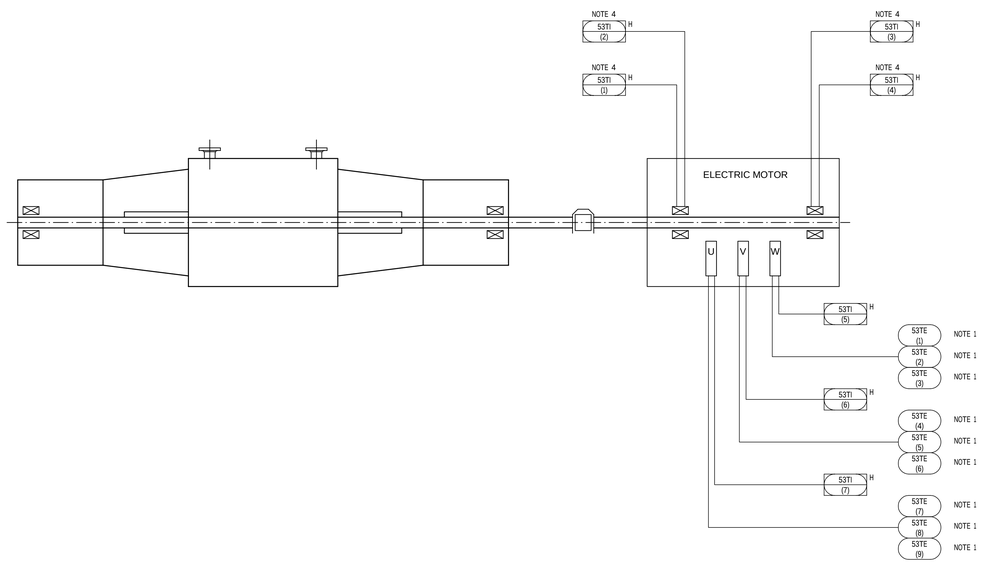

EQUIPMENT TAG	PID NUMB	TI (1)	TI (2)	TI (3)	TI (4)	TI (5)	TI (6)	TI (7)	TE (1)	TE (2)	TE (3)	TE (4)	TE (5)	TE (6)	TE (7)	TE (8)	TE (9)
53GA-01A	082755C-053-PID-0021-0002-01	53TI-202A	53TI-203A	53TI-207A	53TI-208A	53TI-206A	53TI-205A	53TI-204A	53TE-206BA	53TE-206CA	53TE-206DA	53TE-205BA	53TE-205CA	53TE-205DA	53TE-204BA	53TE-204CA	53TE-204DA
53GA-01B	082755C-053-PID-0021-0002-01	53TI-202B	53TI-203B	53TI-207B	53TI-208B	53TI-206B	53TI-205B	53TI-204B	53TE-206BB	53TE-206CB	53TE-206DB	53TE-205BB	53TE-205CB	53TE-205DB	53TE-204BB	53TE-204CB	53TE-204DB
53GA-01S	082755C-053-PID-0021-0002-01	53TI-202S	53TI-203S	53TI-207S	53TI-208S	53TI-206S	53TI-205S	53TI-204S	53TE-206BS	53TE-206CS	53TE-206DS	53TE-205BS	53TE-205CS	53TE-205DS	53TE-204BS	53TE-204CS	53TE-204DS

GENERAL NOTES

- FOR GENERAL NOTES AND SYMBOLS REFER TO P&ID'S 082755C-000-PID-0021-0001/0002/0003.
- ALL INSTRUMENT NOZZLES SHOWN ON EQUIPMENT ARE RATING 300# MINIMUM.
- ALL LOCAL ELECTRONIC INDICATORS HAVE TO BE INSTALLED IN A LOCATION ACCESSIBLE BY OPERATORS (I.E. GROUND LEVEL OR NEAR PLATFORM).
- THE RATING OF THE SAFETY VALVE INLET/OUTLET FLANGES SHALL BE THE SAME OF THE RESPECTIVE SAFETY VALVE INLET OUTLET LINES RATING UNLESS OTHERWISE SPECIFIED.

NOTES:

1. SPARE RTD FOR REDUNDACY PURPOSE NOT WIRED TO ANY TRANSMITTER.
2. DELETED.
3. DELETED.
4. DUPLEX TYPE SENSOR.

Segment Breaks

- End of Group
- Nominal Diameter
- Piping Materials Class
- Max Design Temp. or Press.
- Heat Tracing
- Insulation Requirement
- Coating Requirement
- Supply Responsibility
- Commissioning package
- Design Responsibility
- Norm operating temp or press

CONFIDENTIAL

EQUIPMENT LIST

REV.	DATE	DESCRIPTION	PREP	CKD	APPR
2	23/04/2024	ISSUE FOR CONSTRUCTION 3	F.G.	S.T./F.F.	C.M./M.L.
1	03/10/2023	ISSUE FOR CONSTRUCTION 2	C.A.T.	S.T./E.S.	A.C./M.L.
0	05/05/2023	ISSUE FOR CONSTRUCTION 1	C.A.T.	S.T./E.S.	A.C./M.L.

NESTE

TECHNIP ENERGIES

RDCG (Rotterdam Capacity Growth)
NESTE

UTILITIES MNA

53GA-01A/B/S INSTRUMENTATION

PIPING & INSTRUMENT DIAGRAM

TPIT Drawing No						Page	Rev.
082755C	053	PID	00	41	0081	1 of 1	2
Project	Unit	Doc. Type	Disc	Subj	Ser.No		

NESTE Drawing No				
2305		PID		
Site	Unit	Doc. Type	Drawing Code	Seq.No

TECHNIP ENERGIES ITALY S.p.A - 00148 ROMA - Viale Castello della Magliana, 68

This present document is owned by and is property of TECHNIP ENERGIES ITALY S.p.A. and shall not, under any circumstance, be sold to or partially, directly or indirectly, transferred, transformed, copied, disclosed or used, without its prior written consent, for any purpose and in any way other than that for which it is specifically furnished or outside the extent of the agreed upon right of use.